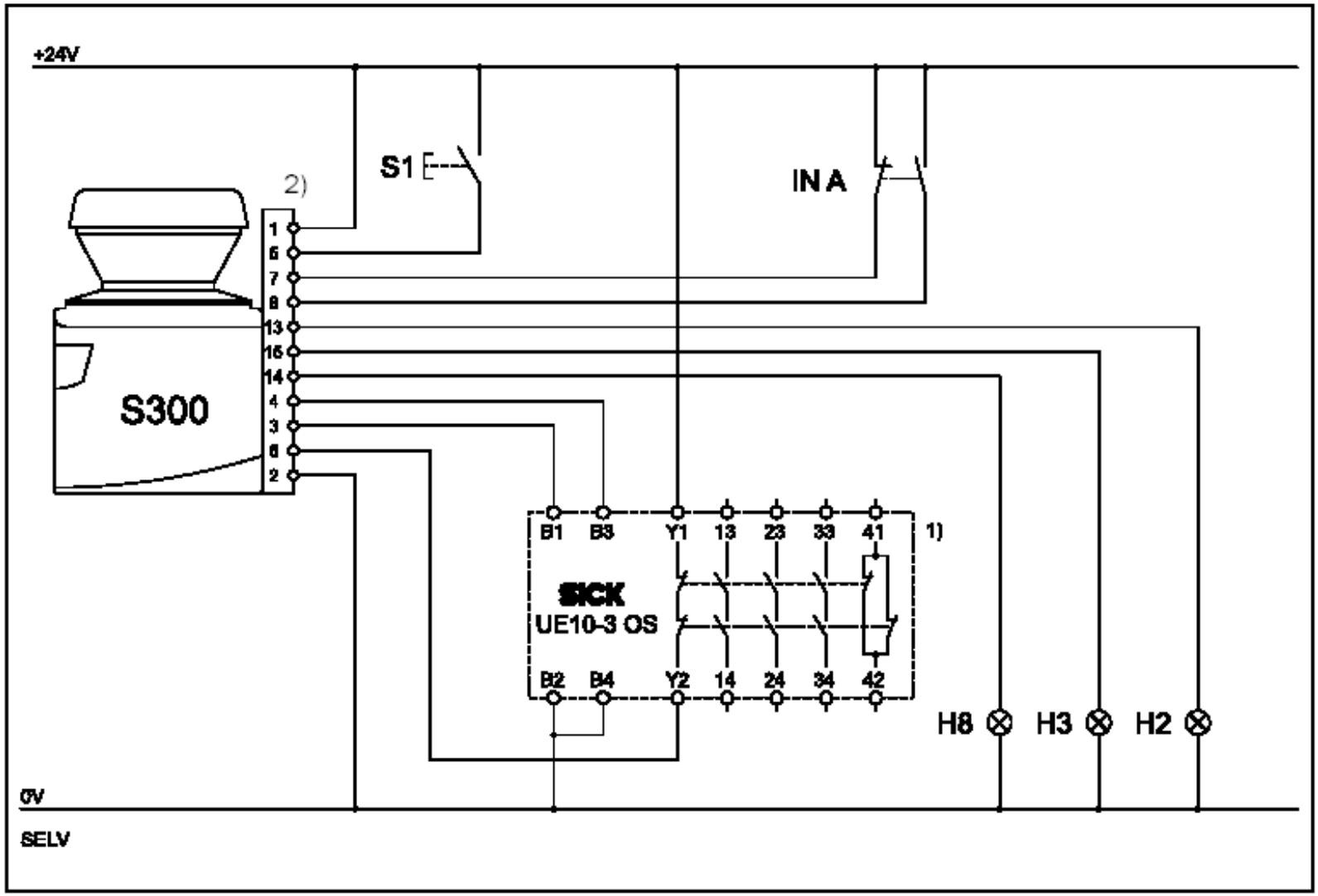
+24V
S1
IN A
2)
S300
1
5
7
8
13
15
14
4
3
6
2
B1
B3
Y1
13
23
33
41
1)
SICK
UE10-3 OS
B2
B4
Y2
14
24
34
42
H8
H3
H2
0V
SELV