PRODUCT INFORMATION

SureSense

THE SURE WAY TO DETECT ANY OBJECT

Cylindrical Photoelectric Sensors

SICK
Sensor Intelligence.

A FAMILY BUILT TO SOLVE ALL YOUR SENSING NEEDS

Solving a wide range of sensing applications has never been easier thanks to the SureSense family of photoelectric sensors. From simple to challenging tasks, this ultra reliable sensor family can detect nearly any object in any environment, ensuring your machines and lines stay up and running at full capacity.

The SureSense line of sensors is designed with convenience features that make setup and maintenance a breeze. Additionally, with a wide offering of variants all available within the same housing style, this sensor family also allows you to standardize on a single sensor platform to reduce mounting, assembly and procurement costs.

8018449/2016-08-26
Subject to change without notice

Easily accommodate connection variability

Whether you standardize on connectors, cables or pigtails, SureSense has you covered. SureSense allows you to specify cables and connectors that are optimized for your application.

Wide sensing breadth

SureSense is equipped with a wide range of sensing types all available in the same housing design. This allows you to reduce variability in bracketry and mounting design.

Flexible functionality

SureSense allows you to define the configuration features you prefer. SICK can provide you with pre-set sensors with no external configurability or sensors with sensitivity adjustments, light/dark switching, time delays or a combination of each.

A FAMILY BUILT TO FIT PERFECTLY IN YOUR ENVIRONMENT

Optimize setup and performance

Traditional sensors provide little or no information regarding the quality of setup or performance. The SureSense signal strength light bar provides instant feedback on the quality of alignment, adjustment and light signal being returned from an object. This additional information allows you to quickly optimize setup to minimize the effects of vibration, object variability and more.

Retroreflective and through-beam

Quick and easy setup with instant feedback regarding the alignment of reflective and through-beam sensors.

Background suppression

Optimize the switching point adjustment to maximize sensing reliability.

Energetic

Continuous signal strength feedback based on object reflectivity provides indication of fluctuations during operation.

8018449/2016-08-26
Subject to change without notice

Maximum durability with VISTAL housing

VISTAL, meaning like steel, is a fiberglass-reinforced material that provides strength and chemical resistivity that is far superior to traditional plastic housings. This gives you “like steel” durability without the cost of metal housings.

Suppression of background reflections

SureSense is equipped with a secondary “pilot LED” to detect interfering objects and reflections in the background. Built-in intelligence automatically suppresses the interfering objects and reflections to maximize detection reliability.

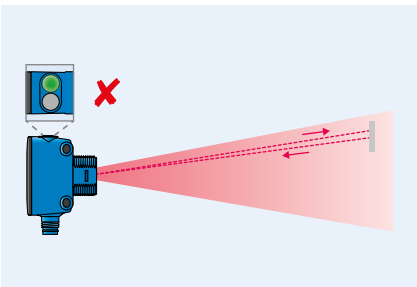

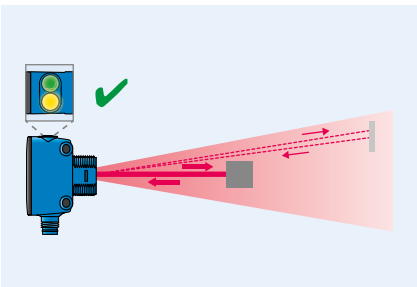

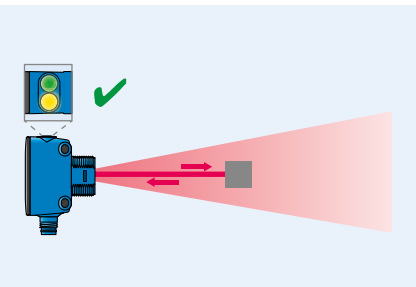

Enhanced cross talk immunity

Unique technology inside SureSense pulses light at a specific time interval and frequency to minimize false tripping due to cross talk from other sensors.

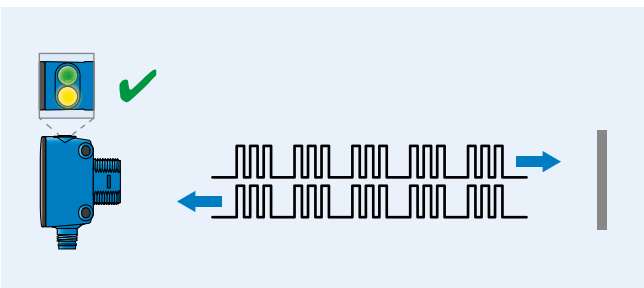

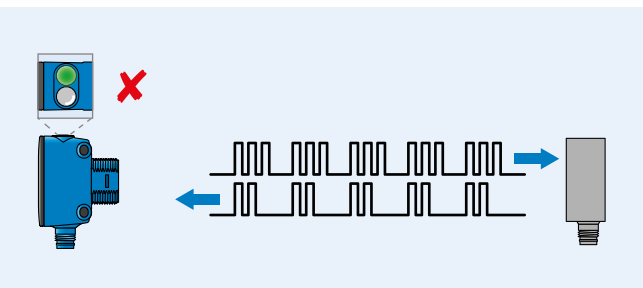

A FAMILY BUILT TO DETECT ANY OBJECT

Precise detection of small objects

The SureSense family is equipped with cutting-edge laser technology, permitting very precise detection of small objects, small holes or through small openings.

Minimal impact from object variability

SICK's industry leading background suppression technology is virtually unaffected by changes in color and materials. Combined with PinPoint LED technology, this provides highly precise and repeatable object detection.

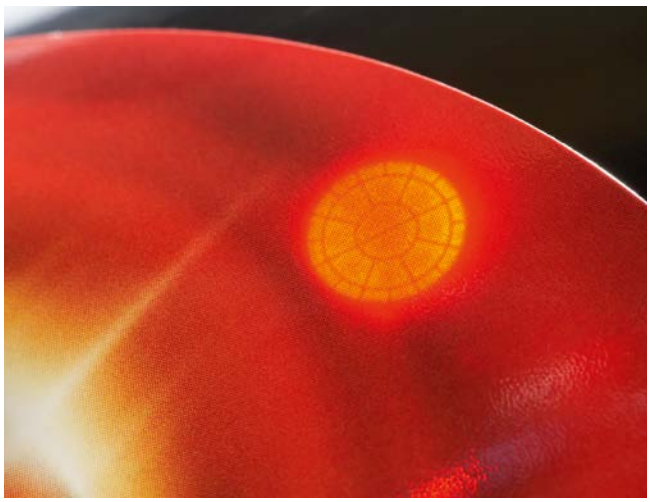

Maximum detection reliability

PinPoint technology from SICK, with its highly visible light spot, will facilitate commissioning, and increase the sensing range, without the need for protective measures against lasers.

PinPoint 2.0 by SICK

8018449/2016-08-26
Subject to change without notice

Reliably detect dark and shiny materials

In these applications, built in intelligence will automatically adjust the light beam to maximize the light being returned to the sensor. This greatly improves reliability when sensing dark and shiny objects.

Consistent transparent object detection

AutoAdapt technology by SICK, increases the up-time of your machine by automatically adjusting the switching threshold as dust or dirt collects on the sensor during operation. SureSense then automatically resets the threshold after cleaning.

AutoAdapt CLEARSENS by SICK

SIRIC ASIC technology

Sensors equipped with SIRIC technology are more powerful than ever before and are highly resistant to all known optical and high-frequency influences. This drives optical reliability regardless of ambient light and emitted light from other sensors. It also helps to maximize reliable sensing distance while miniaturizing sensor size.

SIRIC®
optical ASIC
invented by SICK

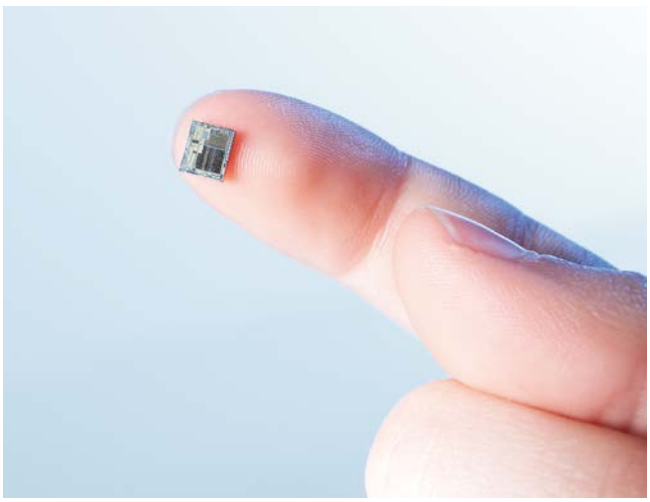

SELECTION GUIDE

	Performance	Housing properties				Sensor properties		
	Max. sensing range	Hybrid design housing	Signal strength light bar	VISTAL®	IP 69K / IP 67	AutoAdapt	AC/DC	
Photoelectric proximity sensors								
Background suppression red light	300 mm	■	■	■	■		■	
Fixed distance	50 mm, 100 mm, 150 mm	■	■	■	■		■	
Background suppression type I laser	300 mm	■	■	■	■			
Energetic red light	600 mm	■	■	■	■		■	
Energetic infrared	1 m	■	■	■	■		■	
Foreground suppression red light	300 mm	■	■	■	■		■	
Foreground suppression type I laser	300 mm	■	■	■	■			
Photoelectric retro-reflective sensors								
Polarized red light	6.5 m	■	■	■	■		■	
Non-polarized red light	6.5 m	■	■	■	■		■	
Clear material	3 m	■	■	■	■		■	
Clear w/AutoAdapt	3 m	■	■	■	■	■	■	
Laser	12 m	■	■	■	■			
Through-beam photoelectric sensors								
Infrared light	20 m	■	■	■	■		■	
Red light	25 m	■	■	■	■		■	
Laser	60 m	■	■	■	■			

8018449/2016-08-26

	Optical properties			Special applications					Page
	PinPoint LED	Laser	SIRIC®	Small objects	Dark and shiny objects	Varying colors and materials	Transparent objects	Objects wrapped in film	
	■		■	■	■	■		■	→ 12
	■		■	■	■	■			→ 12
		■	■	■	■	■		■	→ 18
	■		■						→ 22
			■						→ 22
	■		■	■	■	■		■	→ 28
		■	■	■	■	■		■	→ 32
	■		■		■	■			→ 36
	■		■		■	■			→ 36
	■		■				■		→ 42
	■		■				■		→ 42
		■	■	■	■	■			→ 48
			■		■	■			→ 52
	■		■		■	■			→ 52
		■	■	■	■	■			→ 58

Type code

Photoelectric sensor type

HTB18	Proximity background suppression
HTE18	Proximity energetic
HTF18	Proximity foreground suppression
HL18	Retro-reflective
HSE18	Through-beam (pair)

Technology

L	Laser [1]
G	Clear material detection with AutoAdapt [2] [3]
T	Clear material detection without AutoAdapt [2] [4]

Output type

A	NPN and PNP; dark switching
B	NPN and PNP; light switching
N	NPN; light and dark switching
P	PNP; light and dark switching
V	PNP; light switching; health output [5]
W	NPN; light switching; health output [5]
G	PNP; light switching; alarm output [5]
H	NPN; light switching; alarm output [5]
X	PNP; dark switching; health output [5]
Y	NPN; dark switching; health output [5]
J	PNP; dark switching; alarm output [5]
K	NPN; dark switching; alarm output [5]
F	Push Pull; light and dark switching [6]
M	MOSFET (UV 21.6 V ... 250 V DC; 96 V ... 250 V AC); dark switching
L	MOSFET (UV 21.6 V ... 250 V DC; 96 V ... 250 V AC); light switching

Connection

1	Cable with flying leads
2	M8, 3-pin [7]
3	M8, 4-pin
4	M12, 4-pin
5	Micro 1/2-20, 4-pin [8]
0	Special connection

Cable length [9]

A	Integrated connector (with sensor housing) [10]
B	150 mm
C	300 mm
E	1000 mm
G	2000 mm
Z	Special length

Light source [11]

1	Infrared
2	Red PinPoint
3	Red PinPoint with polarization filter
5	Red laser, Class I [12]

HSE18	HL18	HTE18	HTB18	HTF18
X	-	X	-	-
X	X	X	X	X
-	X	-	-	-
X	X	-	X	X

Signal strength light bar [13]

A	No
B	Yes

Adjustment

A	None [14]
B	Sensitivity/sensing range
C	Adjustable ON delay (0 ... 2 s) [14]
D	Adjustable OFF delay (0 ... 2 s) [14]
E	Light or dark switching selection switch [14]
F	Sensitivity/sensing range; adjustable ON delay (0 ... 2 s)
G	Sensitivity/sensing range; adjustable OFF delay (0 ... 2 s)
H	Sensitivity/sensing range; Light or dark switching selection switch
I	Adjustable ON delay (0 ... 2 s); light/dark switching selection switch [6]
K	Adjustable OFF delay (0 ... 2 s); light/dark switching selection switch [6]
L	Teach [15]
M	Teach; Adjustable ON delay (0 ... 2 s) [15]
N	Teach; Adjustable OFF delay (0 ... 2 s) [15]
P	Teach; Light or dark switching selection switch [15]

Enhancements

D02	Fixed sensing range of 50 mm [16] [17]
D04	Fixed sensing range of 100 mm [16] [17]
D06	Fixed sensing range of 150 mm [16] [17]

HTB18		-							

Footnotes

[1] Not available with **Photoelectric sensor type** HTE18 or **Output type** M or L
[2] Only available with **Photoelectric sensor type** HL18 and requires **Light source** 3
[3] Requires **Adjustment** option L, M, N, or P (teach)
[4] Requires **Adjustment** option B,F, G, or H (Sensitivity)
[5] Not available with **Technology** G or T (clear material detection)
[6] Not available with **Photoelectric sensor type** HTB18 or HTF18
[7] Only the Q1 output will be connected
[8] Only available with **Output type** M or L
[9] Sensor will have a pigtail if a **Cable length** is specified with a connector
[10] Only available with **Connection** 3 (M8, 4-pin) or 4 (M12, 4-pin)
[11] **Light source** available with **Photoelectric sensor type** identified in the adjacent table
[12] Only available with **Technology** L (Laser)
[13] Not available with **Output type** M or L
[14] When selected with **Photoelectric sensor type** HTB18 and HTF18, **Enhancement** D02, D04, or D06 must also be selected
[15] Only available with **Technology** G (clear material detection with AutoAdapt)
[16] Only available with **Photoelectric sensor type** HTB18 or HTF18
[17] Not available with **Adjustment** option B, F, G, or H

8018449/2016-08-26
Subject to change without notice

THE SURE WAY TO DETECT ANY OBJECT

Product description

Designed to streamline your sensor selection, the SureSense photoelectric proximity sensors with background suppression are available with an extensive range of connections, configurations (light /dark switch and time delays) and power supplies all within the same hybrid housing style. Additionally, SureSense is available with a signal strength light bar, which provides immediate feedback to improve sensing reliability during adjustment.

At a glance

- Intuitive signal strength light bar
- Best-in-class background suppression
- VISTAL “tough as steel” housing
- Long sensing range of 300 mm
- Multiple connection and configuration options with identical housing design
- PinPoint LED for highly visible and precise light spot
- DC or AC/DC power supply

Your benefits

- Light bar optimizes adjustment and sensing reliability
- Reliably detect multiple colors and objects with minimal black /white shift
- Automatically suppress detection of unwanted objects or reflections
- Durability of VISTAL housing reduces replacement costs and downtime
- Reduce costs by standardizing sensor mounting, accessories and setup procedures
- Precise detection with no need for protective measures against lasers

Additional information

→ www.sick.com/suresense

For more information, just enter the link or scan the QR code and get direct access to technical data, CAD design models, operating instructions, software, application examples and much more.

8018449/2016-08-26
Subject to change without notice

Detailed technical data

Features

	DC	AC/DC
Sensor principle	Photoelectric proximity sensor	
Detection principle	Background suppression	
Dimensions (W x H x D)	16.2 mm x 45.5 mm x 31.8 mm (Cable) 16.2 mm x 44.9 mm x 31.8 mm (M8) 16.2 mm x 48.5 mm x 31.8 mm (M12) (depending on type)	16.2 mm x 45.5 mm x 34.4 mm
Housing design (light emission)	Hybrid	
Thread diameter (housing)	M18	
Sensing range max.	5 mm ... 300 mm [1]	
Sensing range	5 mm ... 150 mm [2]	
Type of light	Visible red light	
Light source [3]	PinPoint 2.0 LED	
Light spot size (distance)	Ø 7 mm (300 mm)	
Wave length	631 nm	
Adjustment	Potentiometer (depending on type)	
Time delay [4]	On delay / Off delay (depending on type)	
Special features	Light/dark switching selection switch Signal strength light bar (depending on type)	

[1] Object with 90 % reflectance (referred to standard white, DIN 5033)
[2] Object with 6 % reflectance (referred to standard black, DIN 5033)
[3] Average service life: 100,000 h at T_U = +25 °C
[4] Adjustable: 0 ... 2 s

Mechanics/electronics

	DC	AC/DC
Supply voltage	10 V DC ... 30 V DC [1] [2]	21.6 V DC ... 250 V DC [2] [3] 96 V AC ... 250 V AC
Ripple [4]	< 5 V_{pp}	–
Power consumption	≤ 20 mA [5]	≤ 10 mA [6]
Output type	NPN PNP PNP and NPN (depending on type)	MOSFET
Switching mode	Light switching Dark switching Light/dark switching (complementary) (depending on type)	Light switching Dark switching (depending on type)
Output current $I_{max.}$	≤ 100 mA	
Response time [7]	≤ 0.5 ms	
Switching frequency [8]	1,000 Hz	
Connection type	Cable, 4-wire [9] Male M8, 4-pin Male M12, 4-pin Cable with male M8, 3-pin Cable with male M8, 4-pin Cable with male M12, 4-pin (depending on type)	Cable, 3-wire [9] Cable with male Micro 1/2-20, 4-pin
Circuit protection	A [10], B [11], D [12]	
Protection class	III [13]	II [14]

	DC	AC/DC
Weight	18 g	
Housing material	VISTAL	
Optics material	PMMA	
Enclosure rating	IP 67, IP 69K	
Ambient operating temperature	–40 °C ... +65 °C	
Ambient storage temperature	–40 °C ... +75 °C	

[1] Above T_a 55 °C, max. voltage = 24 V and max. current = 50 mA.
[2] Limit values when operated in short-circuit protected network: max. 8 A.
[3] Above T_a 60 °C, max. voltage = 120 V.
[4] May not exceed or fall below U_v tolerances.
[5] Without signal strength light bar and load.
[6] Without load. The output load and sensor must use the same power source.
[7] Signal transit time with resistive load.
[8] With light/dark ratio 1:1.
[9] Do not bend below 0 °C.
[10] A = V_S connections reverse-polarity protected.
[11] B = inputs and output reverse-polarity protected.
[12] D = outputs overcurrent and short-circuit protected.
[13] Reference voltage: 50 V DC.
[14] Rated voltage 250 V AC, overvoltage category 2.

Ordering information

Products with the technical data listed above are available even if that specific part number is not defined in this document.
See type code ordering matrix and availability rules on ➜ page 10 for all possible combination of sensors that are available. Contact your local SICK sales representative or look on ➜ www.sick.com/suresense to request information on a part number not shown in this document.

HTB18, DC, Signal strength light bar

- **Type of light:** visible red light
- **Voltage type:** DC

Sensing range max. [1]	Adjustment	Output type	Switching mode	Connection	Connection diagram	Type	Part no.
≤ 50 mm	None	NPN	Light/dark switching [2]	M12, 4-pin	Cd-243	HTB18-N4A2BAD02	1074759
		PNP	Light/dark switching [2]	M12, 4-pin	Cd-243	HTB18-P4A2BAD02	1074757
≤ 100 mm	None	NPN	Light/dark switching [2]	M12, 4-pin	Cd-243	HTB18-N4A2BAD04	1074760
		PNP	Light/dark switching [2]	M12, 4-pin	Cd-243	HTB18-P4A2BAD04	1074758
5 mm ... 300 mm	Potentiometer (sensing range)	PNP	Light/dark switching [2]	Cable, 4-wire, 2 m	Cd-297	HTB18-P1G2BB	1073432
				M8, 4-pin	Cd-243	HTB18-P3A2BB	1073433
				M12, 4-pin	Cd-243	HTB18-P4A2BB	1073431
		NPN	Light/dark switching [2]	Cable, 4-wire, 2 m	Cd-297	HTB18-N1G2BB	1073430
				M12, 4-pin	Cd-243	HTB18-N4A2BB	1073429
		PNP, NPN	Light switching [3]	M8, 4-pin	Cd-243	HTB18-B3A2BB	1073428
				M12, 4-pin	Cd-243	HTB18-B4A2BB	1073427
	Potentiometer (sensing range) Potentiometer (on delay)	PNP	Light/dark switching [2]	Cable, 4-wire, 2 m	Cd-297	HTB18-P1G2BF	1071877

[1] Object with 90 % reflectance (referred to standard white, DIN 5033)
[2] Q1 = light switching; Q2 = dark switching.
[3] Q1 = PNP; Q2 = NPN.

HTB18, AC/DC

- **Type of light:** visible red light
- **Voltage type:** AC/DC

Sensing range max. [1]	Adjustment	Output type	Switching mode	Connection	Connection diagram	Type	Part no.
5 mm ... 300 mm	Potentiometer (sensing range)	MOSFET	Dark switching	Cable, 4-wire, 2 m	Cd-332	HTB18-M1G2AB	1071048

[1] Object with 90 % reflectance (referred to standard white, DIN 5033)

Characteristic curves

Black / white shift

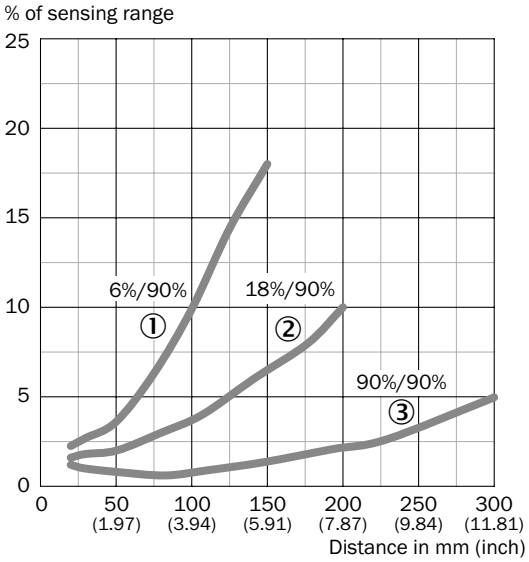

Bar diagrams

Bar diagram photoelectric proximity sensors

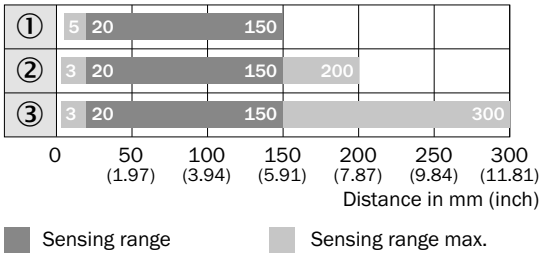

① Sensing range on black, 6 % remission
② Sensing range on gray, 18 % remission
③ Sensing range on white, 90 % remission

Light spot size

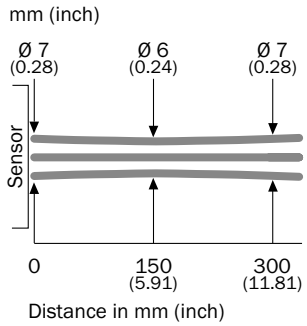

Adjustment

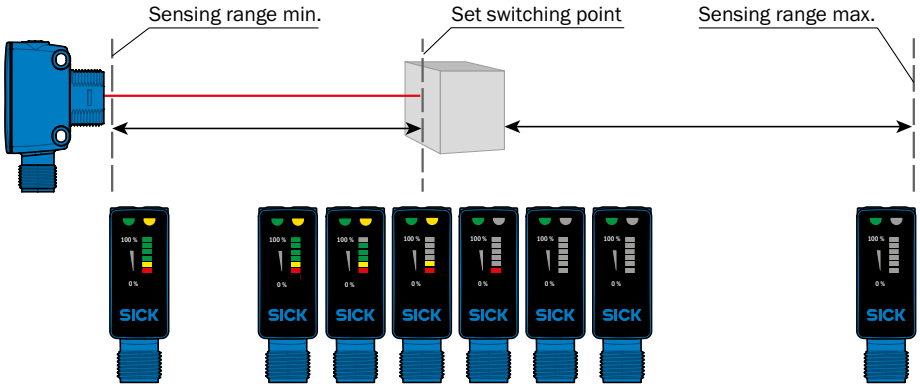

Connection diagram

Cd-243

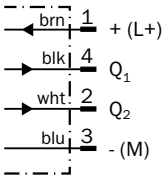

Cd-297

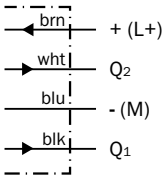

Cd-332

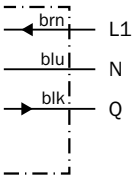

THE SURE WAY TO DETECT ANY OBJECT

Product description

Designed to streamline your sensor selection, the SureSense laser photoelectric proximity sensors with background suppression are available with an extensive range of options, connections and configurations (light /dark switch and time delays) all within an identical hybrid housing style. Additionally, SureSense is available with a signal strength light bar, which provides immediate feedback to improve sensing reliability during adjustment.

At a glance

- Intuitive signal strength light bar
- Precise laser light spot
- Best-in-class background suppression
- Long sensing range of 300 mm
- VISTAL “tough as steel” housing
- Multiple connection and configuration options with identical housing design

Your benefits

- Light bar optimizes adjustment and sensing reliability
- Precise detection of small objects, features and holes
- Reliably detect multiple colors, objects with minimal black /white shift
- VISTAL reduces replacement costs and downtime from damage during installation or use
- Reduce costs by standardizing sensor mounting, accessories and setup procedures

IP 69K ECOLAB

Additional information

➜ www.sick.com/suresense

For more information, just enter the link or scan the QR code and get direct access to technical data, CAD design models, operating instructions, software, application examples and much more.

8018449/2016-08-26
Subject to change without notice

Detailed technical data

Features

Sensor principle	Photoelectric proximity sensor
Detection principle	Background suppression
Dimensions (W x H x D)	16.2 mm x 45.5 mm x 31.8 mm (Cable) 16.2 mm x 44.9 mm x 31.8 mm (M8) 16.2 mm x 48.5 mm x 31.8 mm (M12) (depending on type)
Housing design (light emission)	Hybrid
Thread diameter (housing)	M18
Sensing range max. [1]	30 mm ... 300 mm
Sensing range [2]	30 mm ... 250 mm
Type of light	Visible red light
Light source [3] [4]	Laser
Light spot size (distance)	Ø 2 mm (120 mm)
Wave length	655 nm
Laser class	I
Adjustment	Potentiometer (depending on type)
Time delay [5]	On delay / Off delay (depending on type)
Special features	Light/dark switching selection switch Signal strength light bar (depending on type)

[1] Object with 90 % reflectance (referred to standard white, DIN 5033)
[2] Object with 6 % reflectance (referred to standard black, DIN 5033)
[3] Average service life 50,000 h at T_A = +25 °C
[4] CLASS 1 LASER PRODUCT EN60825-1:2008-05; IEC60825-1:2007-03; Maximum pulse power < 2,5 mW, Pulse length: 4 µs, Wavelength: 650 ... 670 nm; Complies with 21 CFR 1040.10 and 1040.11 except for deviations pursuant to Laser Notice No. 50, dated June 24, 2007
[5] Adjustable: 0 ... 2 s

Mechanics/electronics

Supply voltage [1] [2]	10 V DC ... 30 V DC
Ripple [3]	< 5 V_{pp}
Power consumption [4]	≤ 20 mA
Output type	NPN PNP PNP and NPN (depending on type)
Switching mode	Light switching Dark switching Light/dark switching (complementary) (depending on type)
Output current $I_{max.}$	≤ 100 mA
Response time [5]	≤ 0.5 ms
Switching frequency [6]	1,000 Hz
Connection type	Cable, 4-wire [7] Male M8, 4-pin Male M12, 4-pin Cable with male M8, 3-pin Cable with male M8, 4-pin Cable with male M12, 4-pin (depending on type)
Circuit protection	A [8], B [9], D [10]
Protection class	III [11]

Weight	18 g
Housing material	VISTAL
Optics material	PMMA
Enclosure rating	IP 67, IP 69K
Ambient operating temperature [12]	–30 °C ... +55 °C
Ambient storage temperature	–40 °C ... +70 °C

[1] Above T_a 50 °C, max. voltage = 24V and max. current = 50 mA.
[2] Limit values when operated in short-circuit protected network: max. 8 A.
[3] May not exceed or fall below U_v tolerances.
[4] Without signal strength light bar and load.
[5] Signal transit time with resistive load.
[6] With light/dark ratio 1:1.
[7] Do not bend below 0 °C.
[8] A = V_S connections reverse-polarity protected.
[9] B = inputs and output reverse-polarity protected.
[10] D = outputs overcurrent and short-circuit protected.
[11] Reference voltage: 50V DC.
[12] Below Ta = -10 °C, sensor must be turned on at Ta > -10 °C. Sensor cannot be turned on below Ta= -10 °C.

Ordering information

Products with the technical data listed above are available even if that specific part number is not defined in this document.
See type code ordering matrix and availability rules on ➜ page 10 for all possible combination of sensors that are available. Contact your local SICK sales representative or look on ➜ www.sick.com/suresense to request information on a part number not shown in this document.

HTB18L, DC, Signal strength light bar

- **Type of light:** visible red light
- **Laser class:** I
- **Adjustment:** potentiometer (Sensing range)
- **Switching mode:** light/dark switching (Q1 = light switching.) (Q2 = dark switching.)

Sensing range max. [1]	Output type	Connection	Connection diagram	Type	Part no.
30 mm ... 300 mm	PNP	Cable, 4-wire, 2 m	Cd-297	HTB18L-P1G5BB	1074785
		M12, 4-pin	Cd-243	HTB18L-P4A5BB	1073611
	NPN	Cable, 4-wire, 2 m	Cd-297	HTB18L-N1G5BB	1074788
		M12, 4-pin	Cd-243	HTB18L-N4A5BB	1074782

[1] Object with 90 % reflectance (referred to standard white, DIN 5033)

Characteristic curves

Black / white shift

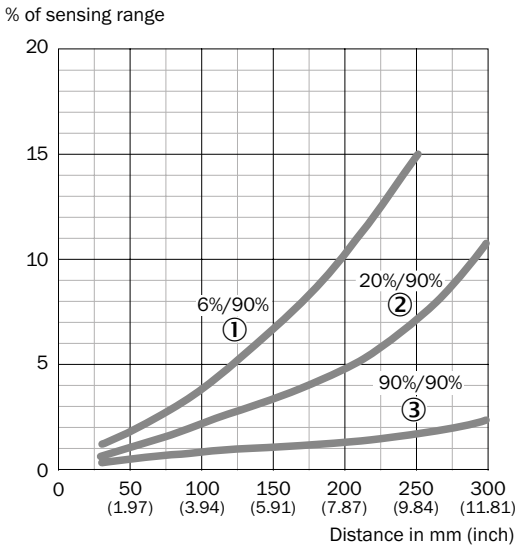

Bar diagrams

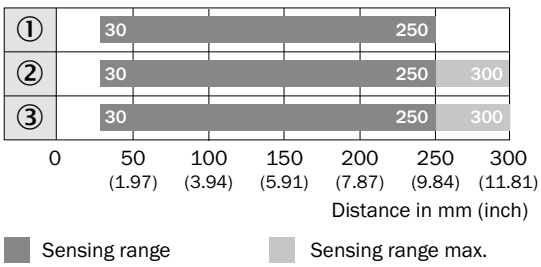

① Sensing range on black, 6 % remission
② Sensing range on gray, 20 % remission
③ Sensing range on white, 90 % remission

Light spot size

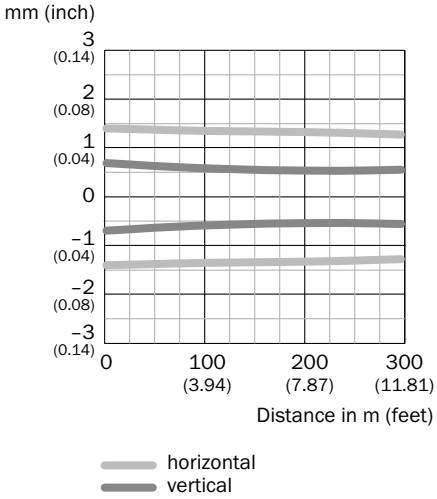

Adjustment

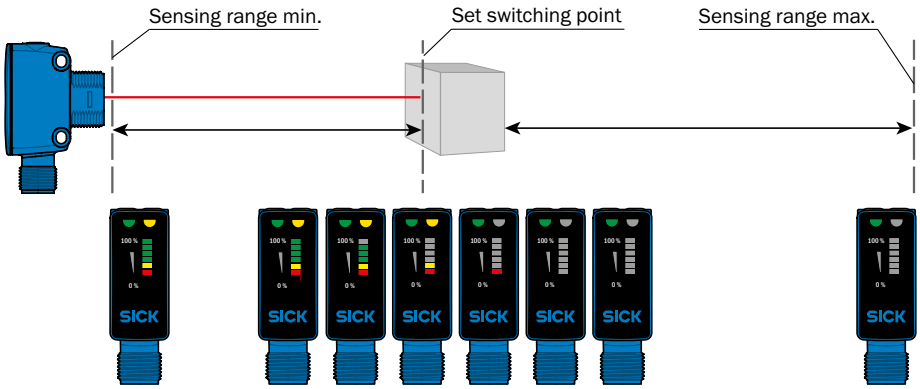

Connection diagram

Cd-243

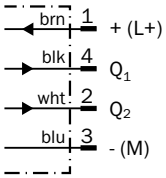

Cd-297

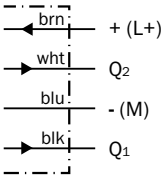

THE SURE WAY TO DETECT ANY OBJECT

Product description

Designed to streamline your sensor selection, the SureSense energetic proximity sensors suppression are available with an extensive range of optic technologies, connections, configurations (light /dark switch and time delays) and power supplies all within the same hybrid housing style. Additionally, SureSense sensors are available with a signal strength light bar, which provides continuous feedback of object reflectivity.

At a glance

- Intuitive signal strength light bar
- VISTAL “tough as steel” housing
- Long sensing ranges: 600 mm for red light and 1 m for infrared light
- Multiple optic, connection and configuration options with identical housing design
- PinPoint LED for highly visible and precise light spot
- DC or AC/DC power supply

Your benefits

- Light bar allows instant signal strength feedback during operation and setup
- Durability of VISTAL housing reduces replacement costs and downtime
- Reduce costs by standardizing sensor mounting, accessories and setup procedures
- PinPoint LED allows small object detection without the need for protective measures against lasers

Additional information

➜ www.sick.com/suresense

For more information, just enter the link or scan the QR code and get direct access to technical data, CAD design models, operating instructions, software, application examples and much more.

8018449/2016-08-26
Subject to change without notice

Detailed technical data

Features

	Visible red light		Infrared light	
	DC	AC/DC	DC	AC/DC
Sensor principle	Photoelectric proximity sensor			
Detection principle	Energetic			
Dimensions (W x H x D)	16.2 mm x 45.5 mm x 31.8 mm (Cable) 16.2 mm x 44.9 mm x 31.8 mm (M8) 16.2 mm x 48.5 mm x 31.8 mm (M12) (depending on type)	16.2 mm x 45.5 mm x 34.4 mm	16.2 mm x 45.5 mm x 31.8 mm (Cable) 16.2 mm x 44.9 mm x 31.8 mm (M8) 16.2 mm x 48.5 mm x 31.8 mm (M12) (depending on type)	16.2 mm x 45.5 mm x 34.4 mm
Housing design (light emission)	Hybrid			
Thread diameter (housing)	M18			
Sensing range max. [1]	5 mm ... 600 mm		5 mm ... 1,000 mm	
Sensing range [2]	10 mm ... 200 mm		10 mm ... 250 mm	
Type of light	Visible red light		Infrared light	
Light source [3]	PinPoint 2.0 LED		LED	
Light spot size (distance)	Ø 12 mm (400 mm)		Ø 110 mm (800 mm)	
Wave length	631 nm		850 nm	
Adjustment	Potentiometer (depending on type)			
Time delay [4]	On delay / Off delay (depending on type)			
Special features	Light/dark switching selection switch Signal strength light bar (depending on type)			

[1] Object with 90 % reflectance (referred to standard white, DIN 5033)
[2] Object with 6 % reflectance (referred to standard black, DIN 5033)
[3] Average service life: 100,000 h at T_U = +25 °C
[4] Adjustable: 0 ... 2 s

Mechanics/electronics

	Visible red light		Infrared light	
	DC	AC/DC	DC	AC/DC
Supply voltage	10 V DC ... 30 V DC [1] [2]	21.6 V DC ... 250 V DC [2] [3] 96 V AC ... 250 V AC	10 V DC ... 30 V DC [1] [2]	21.6 V DC ... 250 V DC [2] [3] 96 V AC ... 250 V AC
Ripple [4]	< 5 V_{pp}	–	< 5 V_{pp}	–
Power consumption	≤ 20 mA [5]	≤ 10 mA [6]	≤ 20 mA [5]	≤ 10 mA [6]
Output type	NPN PNP PNP and NPN PUSH/PULL (depending on type)	MOSFET	NPN PNP PNP and NPN PUSH/PULL (depending on type)	MOSFET
Switching mode	Light switching Dark switching Light/dark switching (complementary) (depending on type)	Light switching Dark switching (depending on type)	Light switching Dark switching Light/dark switching (complementary) (depending on type)	Light switching Dark switching (depending on type)
Output current $I_{max.}$	≤ 100 mA			
Response time [7]	≤ 0.5 ms			
Switching frequency [8]	1,000 Hz			

	Visible red light		Infrared light	
	DC	AC/DC	DC	AC/DC
Connection type	Cable, 4-wire [9] Male M8, 4-pin Male M12, 4-pin Cable with male M8, 3-pin Cable with male M8, 4-pin Cable with male M12, 4-pin (depending on type)	Cable, 3-wire [9] Cable with male Micro 1/2-20, 4-pin	Cable, 4-wire [9] Male M8, 4-pin Male M12, 4-pin Cable with male M8, 3-pin Cable with male M8, 4-pin Cable with male M12, 4-pin (depending on type)	Cable, 3-wire [9] Cable with male Micro 1/2-20, 4-pin
Circuit protection	A [10], B [11], D [12]			
Protection class	III [13]	II [14]	III [13]	II [14]
Weight	18 g			
Housing material	VISTAL			
Optics material	PMMA			
Enclosure rating	IP 67, IP 69K			
EMC [15]	EN 60947-5-2			
Ambient operating temperature	–40 °C ... +70 °C			
Ambient storage temperature	–40 °C ... +75 °C			

[1] Above T_a 55 °C, max. voltage = 24 V and max. current = 50 mA.
[2] Limit values when operated in short-circuit protected network: max. 8 A.
[3] Above T_a 60 °C, max. voltage = 120 V.
[4] May not exceed or fall below U_v tolerances.
[5] Without signal strength light bar and load.
[6] Without load. The output load and sensor must use the same power source.
[7] Signal transit time with resistive load.
[8] With light/dark ratio 1:1.
[9] Do not bend below 0 °C.
[10] A = V_S connections reverse-polarity protected.
[11] B = inputs and output reverse-polarity protected.
[12] D = outputs overcurrent and short-circuit protected.
[13] Reference voltage: 50 V DC.
[14] Rated voltage 250 V AC, overvoltage category 2.
[15] The sensor complies with the Radio Safety Requirements (EMC) for the industrial sector (Radio Safety Class A). It may cause radio interference if used in residential areas.

Ordering information

Products with the technical data listed above are available even if that specific part number is not defined in this document.
See type code ordering matrix and availability rules on ➜ page 10 for all possible combination of sensors that are available. Contact your local SICK sales representative or look on ➜ www.sick.com/suresense to request information on a part number not shown in this document.

HTE18, DC, Signal strength light bar

- **Voltage type:** DC

Type of light	Sensing range max. [1]	Adjustment	Output type	Switching mode	Connection	Connection diagram	Type	Part no.
Visible red light	5 mm ... 600 mm	Potentiometer (Sensitivity)	PNP	Light/dark switching [2]	Cable, 4-wire, 2 m	Cd-297	HTE18-P1G2BB	1074756
					M12, 4-pin	Cd-243	HTE18-P4A2BB	1074755
		Potentiometer (Sensitivity) Potentiometer (on delay)	NPN	Light switching [3] [4]	M8, 4-pin	Cd-243	HTE18-H3A2BF	1073692

[1] Object with 90 % reflectance (referred to standard white, DIN 5033)
[2] Q1 = light switching; Q2 = dark switching.
[3] Q1 = light switching.
[4] Q2 = alarm output.
[5] Q1 = PNP; Q2 = NPN.

Type of light	Sensing range max. [1]	Adjustment	Output type	Switching mode	Connection	Connection diagram	Type	Part no.
Infrared light	5 mm ... 1,000 mm	Potentiometer (Sensitivity)	PNP	Light/dark switching [2]	Cable, 4-wire 2 m	Cd-297	HTE18-P1G1BB	1071749
					M8, 4-pin	Cd-243	HTE18-P3A1BB	1071764
					M12, 4-pin	Cd-243	HTE18-P4A1BB	1071746
			NPN	Light/dark switching [2]	M12, 4-pin	Cd-243	HTE18-N4A1BB	1071758
			PNP, NPN	Light switching [5]	M12, 4-pin	Cd-243	HTE18-B4A1BB	1071753
				Dark switching [5]	Cable, 4-wire 2 m	Cd-297	HTE18-A1G1BB	1071768
					M12, 4-pin	Cd-243	HTE18-A4A1BB	1071756
		Potentiometer (Sensitivity) Potentiometer (off delay)	PNP, NPN	Dark switching [5]	Cable, 4-wire 2 m	Cd-297	HTE18-A1G1BG	1071463

[1] Object with 90 % reflectance (referred to standard white, DIN 5033)
[2] Q1 = light switching; Q2 = dark switching.
[3] Q1 = light switching.
[4] Q2 = alarm output.
[5] Q1 = PNP; Q2 = NPN.

HTE18, AC/DC

- **Voltage type:** AC/DC

Type of light	Sensing range max. [1]	Adjustment	Output type	Switching mode	Connection	Connection diagram	Type	Part no.
Visible red light	5 mm ... 600 mm	Potentiometer (Sensitivity)	MOSFET	Dark switching	Cable, 4-wire 2 m	Cd-332	HTE18-M1G2AB	1072168
		Potentiometer (Sensitivity) Potentiometer (light/dark switching)	MOSFET	Light switching	Cable, 4-wire 2 m	Cd-332	HTE18-L1G2AH	1073697

[1] Object with 90 % reflectance (referred to standard white, DIN 5033)

Characteristic curves

Red light

Operating reserve

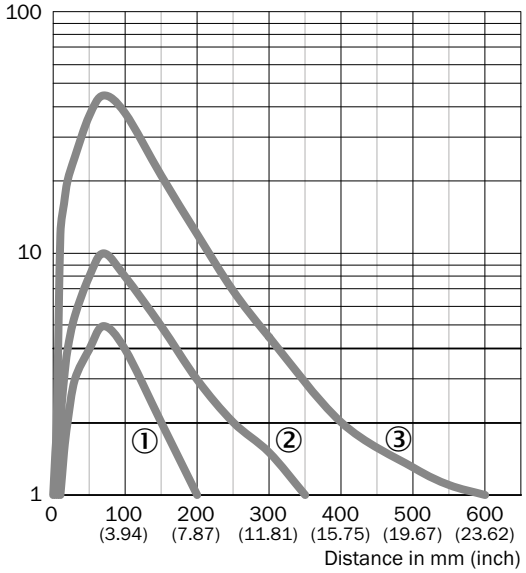

① Sensing range on black, 6 % remission
② Sensing range on gray, 18 % remission
③ Sensing range on white, 90 % remission

Infrared light

Operating reserve

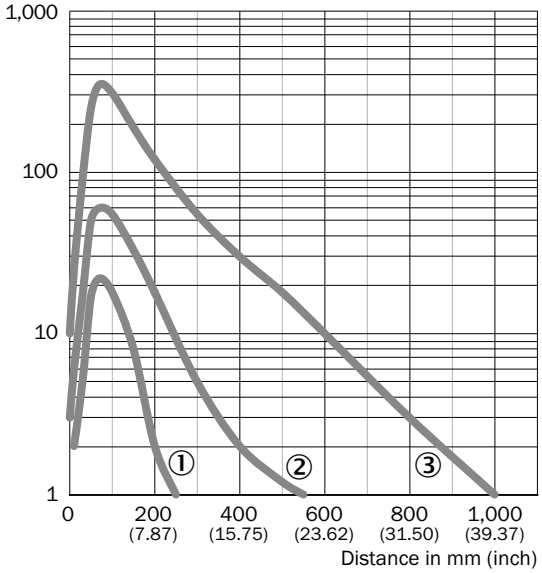

① Sensing range on black, 6 % remission
② Sensing range on gray, 18 % remission
③ Sensing range on white, 90 % remission

Bar diagrams

Red light

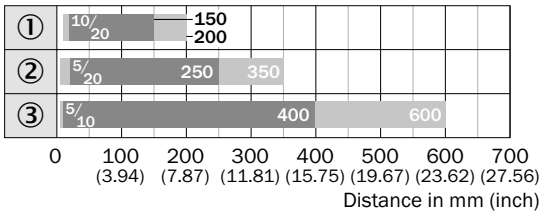

Sensing range Sensing range max.

① Sensing range on black, 6 % remission
② Sensing range on gray, 18 % remission
③ Sensing range on white, 90 % remission

Infrared light

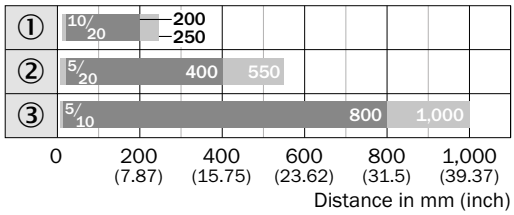

Sensing range Sensing range max.

① Sensing range on black, 6 % remission
② Sensing range on gray, 18 % remission
③ Sensing range on white, 90 % remission

Adjustment

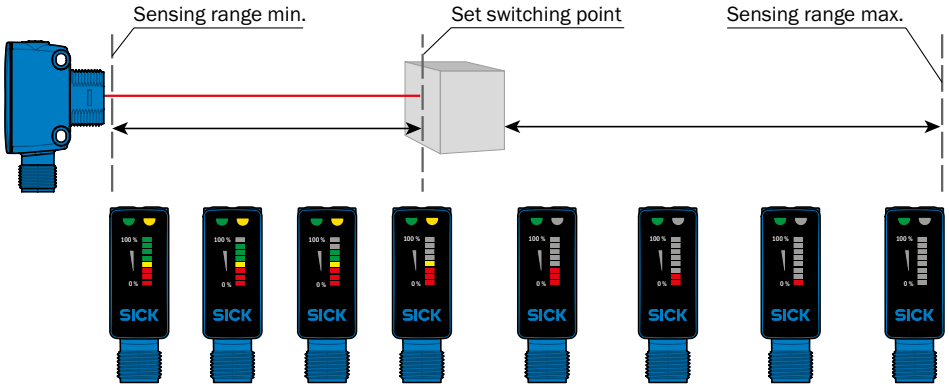

Light spot size

Red light

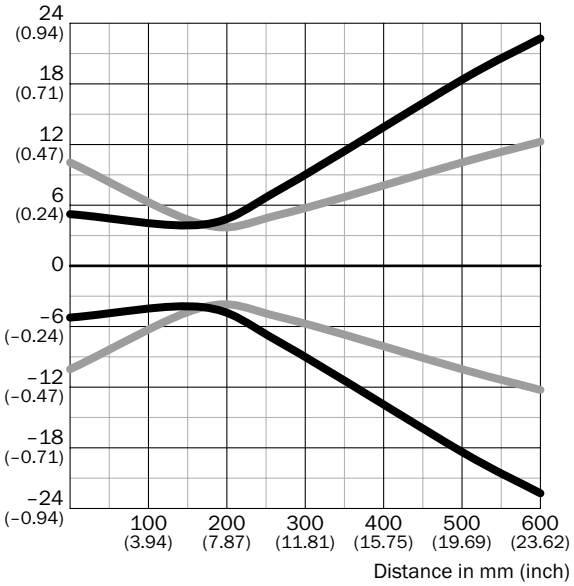

Dimensions in mm (inch)

Sensing range	Vertical	Horizontal
170 **(6.69)**	4 (0.16)	4 (0.16)
270 **(10.63)**	7.5 (0.30)	5 (0.20)
500 **(19.69)**	18 (0.71)	10 (0.39)
600 **(23.62)**	22 (0.87)	12 (0.47)

Infrared light

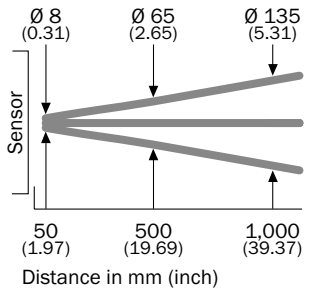

Connection diagram

Cd-243

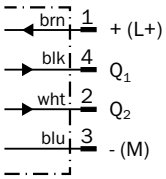

Cd-297

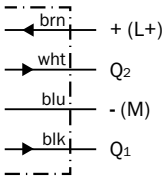

Cd-332

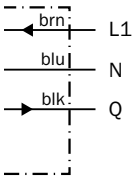

THE SURE WAY TO DETECT ANY OBJECT

Product description

Designed to streamline your sensor selection, the SureSense photoelectric proximity sensors with foreground suppression are available with an extensive range of connections, configurations (light /dark switch and time delays) and power supplies all within the same hybrid housing style. Additionally, SureSense is available with a signal strength light bar, which provides immediate feedback to improve sensing reliability during adjustment.

At a glance

- Intuitive signal strength light bar
- VISTAL "tough as steel" housing
- Long sensing range of 300 mm
- Multiple connection and configuration options with identical housing
- PinPoint LED for highly visible and precise light spot
- DC or AC/DC power supply

Your benefits

- Light bar allows fast and simple alignment during installation
- Durability of VISTAL housing reduces replacement costs and downtime
- Reduce costs by standardizing sensor mounting, accessories and setup procedures
- Precise detection with no need for protective measures against lasers

Additional information

→ www.sick.com/suresense

For more information, just enter the link or scan the QR code and get direct access to technical data, CAD design models, operating instructions, software, application examples and much more.

8018449/2016-08-26
Subject to change without notice

Detailed technical data

Features

	DC	AC/DC
Sensor principle	Photoelectric proximity sensor	
Detection principle	Foreground suppression	
Dimensions (W x H x D)	16.2 mm x 45.5 mm x 31.8 mm (Cable) 16.2 mm x 44.9 mm x 31.8 mm (M8) 16.2 mm x 48.5 mm x 31.8 mm (M12) (depending on type)	16.2 mm x 45.5 mm x 34.4 mm
Housing design (light emission)	Hybrid	
Thread diameter (housing)	M18	
Sensing range max. [1]	5 mm ... 300 mm	
Sensing range [2]	5 mm ... 150 mm	
Type of light	Visible red light	
Light source [3]	PinPoint 2.0 LED	
Light spot size (distance)	Ø 6 mm (150 mm)	
Wave length	631 nm	
Adjustment	Potentiometer (depending on type)	
Special features	Light/dark switching selection switch Signal strength light bar (depending on type)	

[1] Object with 90 % reflectance (referred to standard white, DIN 5033)
[2] Object with 6 % reflectance (referred to standard black, DIN 5033)
[3] Average service life: 100,000 h at T_U = +25 °C

Mechanics/electronics

	DC	AC/DC
Supply voltage	10 V DC ... 30 V DC [1]	21.6 V DC ... 250 V DC [2] 96 V AC ... 250 V AC
Ripple [3]	< 5 V_{pp}	–
Power consumption	≤ 20 mA [4]	≤ 10 mA [5]
Output type	NPN PNP PNP and NPN (depending on type)	MOSFET
Switching mode	Light switching Dark switching Light/dark switching (complementary) (depending on type)	Light switching Dark switching (depending on type)
Output current $I_{max.}$	≤ 100 mA	
Response time [6]	≤ 0.5 ms	
Switching frequency [7]	1,000 Hz	
Connection type	Cable, 4-wire [8] Male M8, 4-pin Male M12, 4-pin Cable with male M8, 3-pin Cable with male M8, 4-pin Cable with male M12, 4-pin (depending on type)	Cable, 3-wire [8] Cable with male Micro 1/2-20, 4-pin
Circuit protection	A [9], B [10], D [11]	
Protection class	III [12]	II [13]
Weight	18 g	
Housing material	VISTAL	

Optics material	PMMA
Enclosure rating	IP 67, IP 69K
Ambient operating temperature	–40 °C ... +65 °C
Ambient storage temperature	–40 °C ... +75 °C

[1] Above T_a 45 °C, max. voltage = 24 V and max. current = 50 mA.
[2] Above T_a 60 °C, max. voltage = 120 V.
[3] May not exceed or fall below U_v tolerances.
[4] Without load.
[5] Without load. The output load and sensor must use the same power source.
[6] Signal transit time with resistive load.
[7] With light/dark ratio 1:1.
[8] Do not bend below 0 °C.
[9] A = V_S connections reverse-polarity protected.
[10] B = inputs and output reverse-polarity protected.
[11] D = outputs overcurrent and short-circuit protected.
[12] Reference voltage: 50 V DC.
[13] Rated voltage 250 V AC, overvoltage category 2.

Ordering information

Products with the technical data listed above are available even if that specific part number is not defined in this document.
See type code ordering matrix and availability rules on ➜ page 10 for all possible combination of sensors that are available. Contact your local SICK sales representative or look on ➜ www.sick.com/suresense to request information on a part number not shown in this document.

HTF18, DC, Signal strength light bar

- **Type of light:** visible red light
- **Voltage type:** DC
- **Adjustment:** potentiometer (sensing range)
- **Switching mode:** Light/dark switching (Q1 = light switching.) (Q2 = dark switching.)

Sensing range max. [1]	Output type	Connection	Connection diagram	Type	Part no.
5 mm ... 300 mm	PNP	M12, 4-pin	Cd-243	HTF18-P4A2BB	1075806
	NPN			HTF18-N4A2BB	1075807
	PNP	Cable, 4-wire, 2 m	Cd-297	HTF18-P1G2BB	1075808
	NPN			HTF18-N1G2BB	1075809

[1] Object with 90 % reflectance (referred to standard white, DIN 5033)

Characteristic curves

Black / white shift

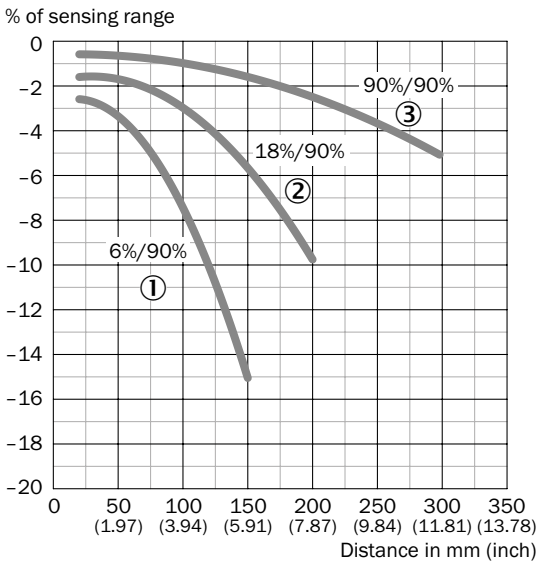

Bar diagrams

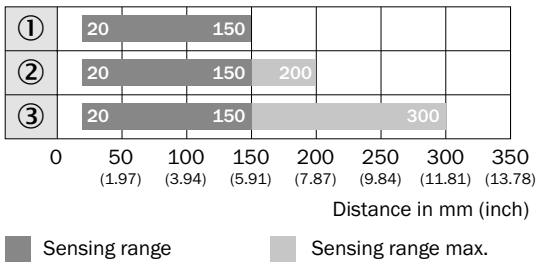

① Sensing range on black, 6 % remission
② Sensing range on gray, 18 % remission
③ Sensing range on white, 90 % remission

Light spot size

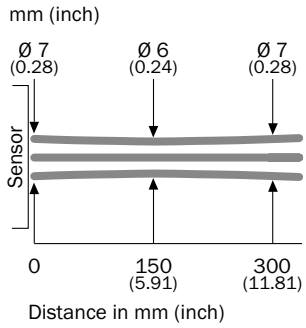

Adjustment

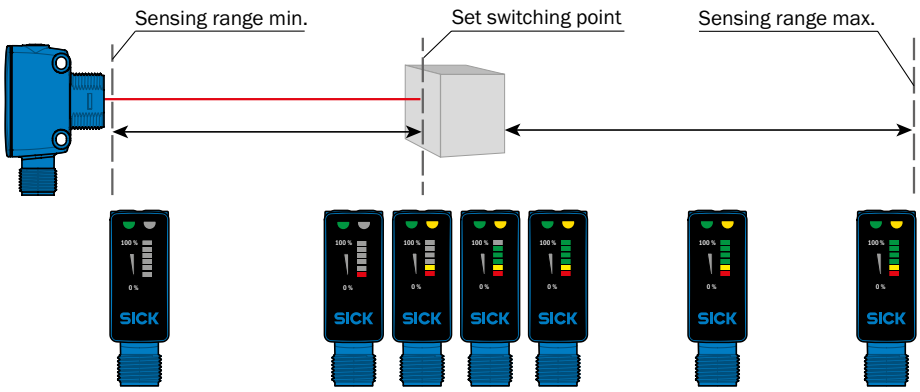

Connection diagram

Cd-243

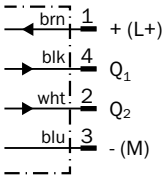

Cd-297

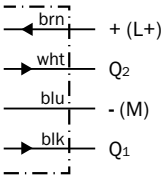

THE SURE WAY TO DETECT ANY OBJECT

Product description

Designed to streamline your sensor selection, the SureSense photoelectric proximity sensors with foreground suppression are available with Type I laser optical technology and an extensive range of connections and configurations (light /dark switch and time delays) all within an identical hybrid housing style. Additionally, SureSense is available with a signal strength light bar, which provides immediate feedback to improve sensing reliability during adjustment.

At a glance

- Intuitive signal strength light bar
- VISTAL “tough as steel” housing
- Precise laser light spot
- Long sensing range of 300 mm
- Multiple connection and configuration options with identical housing

Your benefits

- Light bar allows fast and simple alignment during installation
- Durability of VISTAL housing reduces replacement costs and downtime
- Precise detection of small objects features
- Reduce sensor costs by standardizing mounting, accessories and setup procedures

IP 69K ECOLAB

Additional information

➜ www.sick.com/suresense

For more information, just enter the link or scan the QR code and get direct access to technical data, CAD design models, operating instructions, software, application examples and much more.

8018449/2016-08-26
Subject to change without notice

Detailed technical data

Features

Sensor principle	Photoelectric proximity sensor
Detection principle	Foreground suppression
Dimensions (W x H x D)	16.2 mm x 45.5 mm x 31.8 mm (Cable) 16.2 mm x 44.9 mm x 31.8 mm (M8) 16.2 mm x 48.5 mm x 31.8 mm (M12) (depending on type)
Housing design (light emission)	Hybrid
Thread diameter (housing)	M18
Sensing range max. [1]	40 mm ... 300 mm
Sensing range [2]	40 mm ... 200 mm
Type of light	Visible red light
Light source [3] [4]	Laser
Light spot size (distance)	Ø 2 mm (120 mm)
Wave length	655 nm
Laser class	I
Adjustment	Potentiometer (depending on type)
Time delay [5]	On delay / Off delay (depending on type)
Special features	Light/dark switching selection switch Signal strength light bar (depending on type)

[1] Object with 90 % reflectance (referred to standard white, DIN 5033)

[2] Object with 6 % reflectance (referred to standard black, DIN 5033)

[3] Average service life: 50,000 h at T_U = +25 °C

[4] CLASS 1 LASER PRODUCT EN60825-1:2008-05; IEC60825-1:2007-03; Maximum pulse power < 2,5 mW, Pulse length: 4 µs, Wavelength: 650 ... 670 nm; Complies with 21 CFR 1040.10 and 1040.11 except for deviations pursuant to Laser Notice No. 50, dated June 24, 2007

[5] Adjustable: 0 ... 2 s

Mechanics/electronics

Supply voltage [1] [2]	10 V DC ... 30 V DC
Ripple [3]	< 5 V_{pp}
Power consumption [4]	≤ 20 mA
Output type	NPN PNP PNP and NPN (depending on type)
Switching mode	Light switching Dark switching Light/dark switching (complementary) (depending on type)
Output current $I_{max.}$	≤ 100 mA
Response time [5]	≤ 0.5 ms
Switching frequency [6]	1,000 Hz
Connection type	Cable, 4-wire [7] Male M8, 4-pin Male M12, 4-pin Cable with male M8, 3-pin Cable with male M8, 4-pin Cable with male M12, 4-pin (depending on type)
Circuit protection	A [8], B [9], D [10]
Protection class [11]	III

Weight	18 g
Housing material	VISTAL
Optics material	PMMA
Enclosure rating	IP 67, IP 69K
Ambient operating temperature [12]	–40 °C ... +65 °C
Ambient storage temperature	–40 °C ... +75 °C

[1] Above T_a 50 °C, max. voltage = 24V and max. current = 50 mA.
[2] Limit values when operated in short-circuit protected network: max. 8 A.
[3] May not exceed or fall below U_v tolerances.
[4] Without load.
[5] Signal transit time with resistive load.
[6] With light/dark ratio 1:1.
[7] Do not bend below 0 °C.
[8] A = V_S connections reverse-polarity protected.
[9] B = inputs and output reverse-polarity protected.
[10] D = outputs overcurrent and short-circuit protected.
[11] Reference voltage: 50 V DC.
[12] Below Ta = -10 °C, sensor must be turned on at Ta > -10 °C. Sensor cannot be turned on below Ta= -10 °C.

Ordering information

Products with the technical data listed above are available even if that specific part number is not defined in this document.
See type code ordering matrix and availability rules on ➜ page 10 for all possible combination of sensors that are available. Contact your local SICK sales representative or look on ➜ www.sick.com/suresense to request information on a part number not shown in this document.

HTF18L, DC, Signal strength light bar

- **Type of light:** visible red light
- **Laser class:** I
- **Switching mode:** Light/dark switching (Q1 = light switching.) (Q2 = dark switching.)

Sensing range max. [1]	Output type	Output type	Connection	Connection diagram	Type	Part no.
40 mm ... 300 mm	Potentiometer (sensing range)	NPN	Cable, 4-wire, 2 m	Cd-297	HTF18L-N1G5BB	1075813
		PNP			HTF18L-P1G5BB	1075812
		NPN	M12, 4-pin	Cd-243	HTF18L-N4A5BB	1075811
		PNP			HTF18L-P4A5BB	1075810

[1] Object with 90 % reflectance (referred to standard white, DIN 5033)

Characteristic curves

Black / white shift

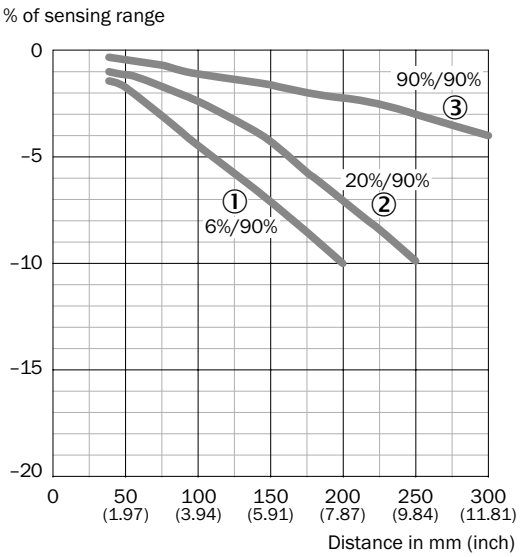

Bar diagram

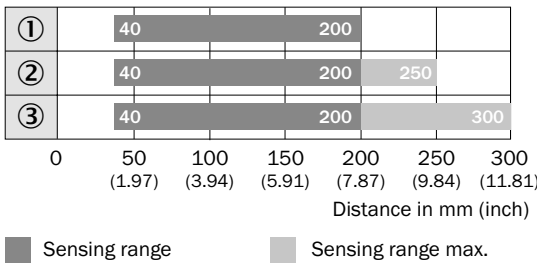

① Sensing range on black, 6 % remission
② Sensing range on gray, 20 % remission
③ Sensing range on white, 90 % remission

Light spot size

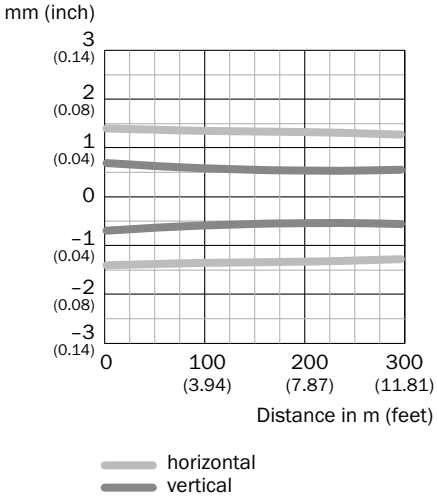

Adjustment

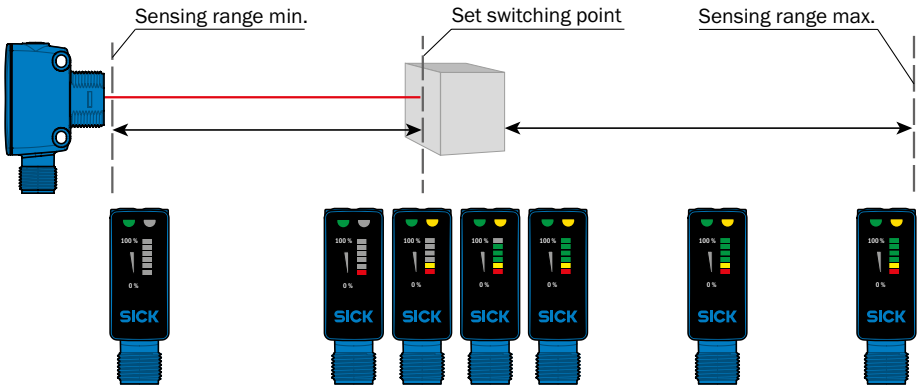

Connection diagram

Cd-243

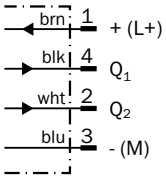

Cd-297

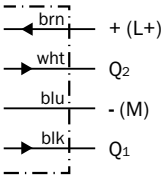

THE SURE WAY TO DETECT ANY OBJECT

Product description

Designed to streamline your sensor selection, the SureSense retro-reflective sensors are available with an extensive range of optics, connections, configurations (light /dark switch and time delays) and power supplies all within the same hybrid housing style. All of these options are available with a signal strength light bar, which provides immediate feedback to improve alignment and setup speed.

At a glance

- Intuitive signal strength light bar
- VISTAL "tough as steel" housing
- Multiple optic, connection and configuration options with identical housing design
- Long sensing range of 6.5 m for polarized and non-polarized sensors
- PinPoint LED for highly visible and precise light spot
- DC or AC/DC power supply

Your benefits

- Light bar ensures fast and simple visual-based alignment
- Durability of VISTAL housing reduces replacement costs and downtime
- Reduce costs by standardizing sensor mounting, accessories and setup procedures
- Precise detection with no need for protective measures against lasers

Additional information

→ www.sick.com/suresense

For more information, just enter the link or scan the QR code and get direct access to technical data, CAD design models, operating instructions, software, application examples and much more.

8018449/2016-08-26
Subject to change without notice

Detailed technical data

Features

	DC	AC/DC
Sensor principle	Photoelectric retro-reflective sensor	
Detection principle	Dual lens	
Dimensions (W x H x D)	16.2 mm x 45.5 mm x 31.8 mm (Cable) 16.2 mm x 44.9 mm x 31.8 mm (M8) 16.2 mm x 48.5 mm x 31.8 mm (M12) (depending on type)	16.2 mm x 45.5 mm x 34.4 mm
Housing design (light emission)	Hybrid	
Thread diameter (housing)	M18	
Sensing range max. [1]	0.03 m ... 6.5 m	
Sensing range [1]	0.03 m ... 5 m	
Type of light	Visible red light	
Light source [2]	PinPoint 2.0 LED	
Light spot size (distance)	130 mm x 260 mm (6.5 m)	
Wave length	631 nm	
Adjustment	Potentiometer (depending on type)	
Time delay [3]	On delay / Off delay (depending on type)	
Special features	Light/dark switching selection switch Signal strength light bar (depending on type)	

[1] PL80A

[2] Average service life: 100,000 h at T_U = +25 °C

[3] Adjustable: 0 ... 2 s

Mechanics/electronics

	DC	AC/DC
Supply voltage	10 V DC ... 30 V DC [1]	21.6 V DC ... 250 V DC [2] 96 V AC ... 250 V AC
Ripple [3]	< 5 V_{pp}	–
Power consumption	≤ 20 mA [4]	≤ 10 mA [5]
Output type	PNP NPN PNP and NPN NPN PUSH/PULL (depending on type)	MOSFET
Switching mode	Light switching Dark switching Light/dark switching (complementary) (depending on type)	Light switching Dark switching (depending on type)
Output current $I_{max.}$	≤ 100 mA	
Response time [6]	≤ 0.5 ms	
Switching frequency [7]	1,000 Hz	
Connection type	Cable, 4-wire [8] Male M8, 4-pin Male M12, 4-pin Cable with male M8, 3-pin Cable with male M8, 4-pin Cable with male M12, 4-pin (depending on type)	Cable, 3-wire [8] Cable with male Micro 1/2-20, 4-pin (depending on type)
Circuit protection	A [9], B [10], D [11]	

	DC	AC/DC
Protection class	III [12]	II [13]
Weight	18 g	
Polarisation filter	✔	
Housing material	VISTAL	
Optics material	PMMA	
Enclosure rating	IP 67, IP 69K	
EMC [14]	EN 60947-5-2	
Ambient operating temperature	–40 °C ... +70 °C	
Ambient storage temperature	–40 °C ... +75 °C	

[1] Limit values when operated in short-circuit protected network: max. 8 A.
[2] Above T_a 60 °C, max. voltage = 120 V.
[3] May not exceed or fall below U_v tolerances.
[4] Without signal strength light bar and load.
[5] Without load. The output load and sensor must use the same power source.
[6] Signal transit time with resistive load.
[7] With light/dark ratio 1:1.
[8] Do not bend below 0 °C.
[9] A = V_S connections reverse-polarity protected.
[10] B = inputs and output reverse-polarity protected.
[11] D = outputs overcurrent and short-circuit protected.
[12] Reference voltage: 50 V DC.
[13] Rated voltage 250 V AC, overvoltage category 2.
[14] The sensor complies with the Radio Safety Requirements (EMC) for the indus-trial sector (Radio Safety Class A). It may cause radio interference if used in residential areas.

Ordering information

Products with the technical data listed above are available even if that specific part number is not defined in this document.
See type code ordering matrix and availability rules on ➜ page 10 for all possible combination of sensors that are available. Contact your local SICK sales representative or look on ➜ www.sick.com/suresense to request information on a part number not shown in this document.

HL18, DC, Signal strength light bar

- **Type of light:** visible red light
- **Voltage type:** DC

Sensing range max. [1]	Adjustment	Output type	Switching mode	Connection	Connection diagram	Type	Part no.
0.03 m ... 6.5 m	None	PNP	Light/dark switching [2]	Cable, 4-wire, 2 m	Cd-297	HL18-P1G3BA	1071757
				M12, 4-pin	Cd-243	HL18-P4A3BA	1071743
				Cable with M8, 3-pin, 300 mm	Cd-045	HL18-P2C3BA	1071761
				Cable with M8, 3-pin, 1 m	Cd-045	HL18-P2E3BA	1071762
		NPN	Light/dark switching [2]	Cable, 4-wire, 2 m	Cd-297	HL18-N1G3BA	1075814
				M8, 4-pin	Cd-243	HL18-N3A3BA	1071763
				M12, 4-pin	Cd-243	HL18-N4A3BA	1071748
			Light switching [3] [4]	M8, 4-pin	Cd-243	HL18-W3A3BA	1073691

[1] PL80A.
[2] Q1 = light switching; Q2 = dark switching.
[3] Q1 = light switching.
[4] Q2 = health output.
[5] Q1 = PNP; Q2 = NPN.

Sensing range max. [1]	Adjustment	Output type	Switching mode	Connection	Connection diagram	Type	Part no.
0.03 m ... 6.5 m	None	PNP, NPN	Light switching [5]	Cable, 4-wire, 2 m	Cd-297	HL18-B1G3BA	1071765
				M12, 4-pin	Cd-243	HL18-B4A3BA	1071754
			Dark switching [5]	Cable, 4-wire, 2 m	Cd-297	HL18-A1G3BA	1071752
				M12, 4-pin	Cd-243	HL18-A4A3BA	1071747
				M8, 4-pin	Cd-243	HL18-A3A3BA	1071772
	Potentiometer (off delay)	PNP	Light/dark switching [2]	Cable, 4-wire, 2 m	Cd-297	HL18-P1G3BD	1071773
				M8, 4-pin	Cd-243	HL18-P3A3BD	1071767
		NPN	Light/dark switching [2]	M12, 4-pin	Cd-243	HL18-N4A3BD	1071771
		PUSH/PULL	Light/dark switching [2]	M8, 4-pin	Cd-243	HL18-F3A3BD	1073695
	Potentiometer (Sensitivity) Potentiometer (off delay)	NPN	Light/dark switching [2]	M12, 4-pin	Cd-243	HL18-N4A3BG	1072065

[1] PL80A.
[2] Q1 = light switching; Q2 = dark switching.
[3] Q1 = light switching.
[4] Q2 = health output.
[5] Q1 = PNP; Q2 = NPN.

HL18, AC/DC

- **Type of light:** visible red light
- **Polarisation filter:** ✔
- **Voltage type:** AC/DC
- **Switching mode:** Dark switching

Sensing range max. [1]	Adjustment	Output type	Connection	Connection diagram	Type	Part no.
0.03 m ... 6.5 m	None	MOSFET	Cable, 4-wire, 2 m	Cd-332	HL18-M1G3AA	1072226
			Cable with connector Micro (1/2”-20), 4-pin 150 m PVC	Cd-333	HL18-M5B3AA	1071046
	Potentiometer (off delay)	MOSFET	Cable, 4-wire, 2 m	Cd-332	HL18-M1G3AD	1073696

[1] PL80A.

Characteristic curves

Operating reserve

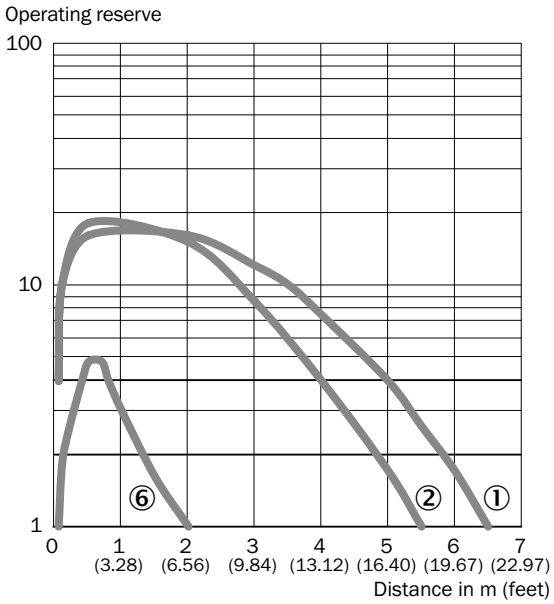

Bar diagrams

Bar diagram photoelectric retro-reflective sensors

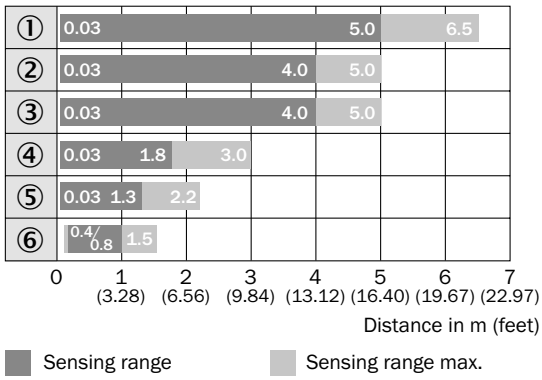

① PL80A
② PL40A
③ P250
④ PL30A, PL31A
⑤ PL20A
⑥ IREF6000 (REF-IRF-56)

Light spot size

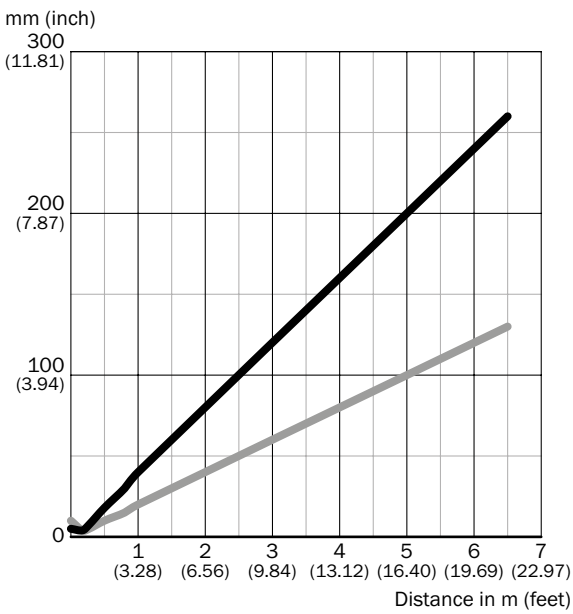

Dimensions in mm (inch)

Sensing range	Horizontal	Vertical
0.5 m (1.64 feet)	18 (0.71)	10 (0.39)
1 m (3.28 feet)	40 (1.57)	20 (0.79)
5 m (16.40 feet)	200 (7.87)	100 (3.94)
6.5 m (21.33 feet)	260 (10.24)	130 (5.12)

8018449/2016-08-26
Subject to change without notice

Adjustment

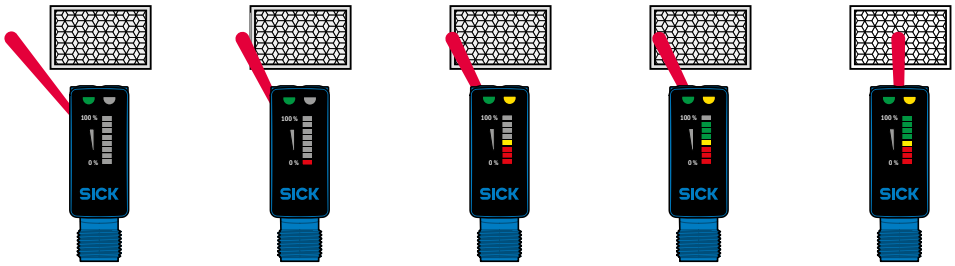

Connection diagram

Cd-045

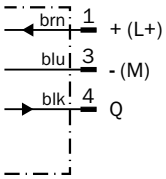

Cd-243

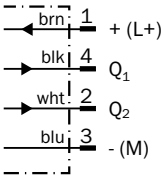

Cd-297

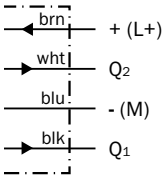

Cd-332

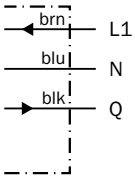

Cd-333

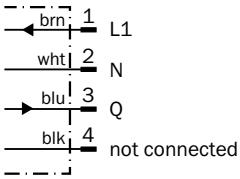

THE SURE WAY TO DETECT ANY OBJECT

Product description

The SureSense family of photoelectric sensors provides reliable detection of virtually any object in any environment. This versatility allows detection of the very basic to most difficult objects including black, shiny, transparent, varying color and more.
SureSense does this by providing best-in-class performance along with an extremely broad offering of sensing options, output types and advanced features. Plus, an intuitive signal strength light bar makes installation and troubleshooting easier than ever. All this cutting edge technology is built into a VISTAL™ housing, which is 9 times stronger than ABS housings.

At a glance

- Intuitive signal strength light bar
- Options for standard adjustment or AutoAdapt adjustments
- VISTAL “tough as steel” housing
- Multiple connection and configuration options with identical housing
- DC or AC/DC power supply

Your benefits

- Light bar allows fast and simple adjustment and alignment during installation
- Precise detection of a wide variety of transparent objects
- AutoAdapt technology automatically adjusts threshold as dust or dirt collects on sensor and resets once cleaned
- Durability of VISTAL housing reduces replacement costs and downtime
- Reduce sensor costs by standardizing mounting, accessories and setup procedures

Additional information

➜ www.sick.com/suresense

For more information, just enter the link or scan the QR code and get direct access to technical data, CAD design models, operating instructions, software, application examples and much more.

8018449/2016-08-26
Subject to change without notice

Detailed technical data

Features

	HL18T		HL18G	
	DC	AC/DC	DC	AC/DC
Sensor principle	Photoelectric retro-reflective sensor			
Dimensions (W x H x D)	16.2 mm x 45.5 mm x 31.8 mm (Cable) 16.2 mm x 44.9 mm x 31.8 mm (M8) 16.2 mm x 48.5 mm x 31.8 mm (M12) (depending on type)	16.2 mm x 45.5 mm x 34.4 mm	16.2 mm x 45.5 mm x 31.8 mm (Cable) 16.2 mm x 44.9 mm x 31.8 mm (M8) 16.2 mm x 48.5 mm x 31.8 mm (M12) (depending on type)	16.2 mm x 45.5 mm x 34.4 mm
Housing design (light emission)	Hybrid			
Thread diameter (housing)	M18			
Sensing range max. [1]	0.1 m ... 3 m			
Sensing range [1]	0.1 m ... 2.5 m			
Type of light	Visible red light			
Light source [2]	PinPoint 2.0 LED			
Light spot size (distance)	60 mm x 120 mm (3 m)			
Wave length	631 nm			
Adjustment	Potentiometer (depending on type)			
Time delay [3]	On delay / Off delay (depending on type)			
AutoAdapt	–		✔	
Special features	Light/dark switching selection switch Signal strength light bar (depending on type)			

[1] PL80A.

[2] Average service life: 100,000 h at T_U = +25 °C

[3] Adjustable: 0 ... 2 s

Mechanics/electronics

	HL18T		HL18G	
	DC	AC/DC	DC	AC/DC
Supply voltage [1]	10 V DC ... 30 V DC	21.6 V DC ... 250 V DC 96 V AC ... 250 V AC	10 V DC ... 30 V DC	21.6 V DC ... 250 V DC 96 V AC ... 250 V AC
Ripple [2]	< 5 V_{pp}	–	< 5 V_{pp}	–
Power consumption [3]	≤ 20 mA	≤ 10 mA	≤ 20 mA	≤ 10 mA
Output type	PNP NPN PNP and NPN PUSH/PULL (depending on type)	MOSFET	PNP NPN PNP and NPN PUSH/PULL (depending on type)	MOSFET
Switching mode	Light switching Dark switching Light/dark switching (complementary) (depending on type)	Light switching Dark switching (depending on type)	Light switching Dark switching Light/dark switching (complementary) (depending on type)	Light switching Dark switching (depending on type)
Output current $I_{max.}$	≤ 100 mA			
Response time [4]	≤ 0.5 ms			
Switching frequency [5]	1,000 Hz			

Connection type	Cable, 4-wire [6] Male M8, 4-pin Male M12, 4-pin Cable with male M8, 3-pin Cable with male M8, 4-pin Cable with male M12, 4-pin (depending on type)	Cable, 3-wire [6] Cable with male Micro 1/2-20, 4-pin (depending on type)	Cable, 4-wire [6] Male M8, 4-pin Male M12, 4-pin Cable with male M8, 3-pin Cable with male M8, 4-pin Cable with male M12, 4-pin (depending on type)	Cable, 3-wire [6] Cable with male Micro 1/2-20, 4-pin (depending on type)
Circuit protection	A [7], B [8], D [9]			
Protection class	III [10]	II [11]	III [10]	II [11]
Weight	18 g			
Polarisation filter	✔			
Housing material	VISTAL			
Optics material	PMMA			
Enclosure rating	IP 67, IP 69K			
EMC [12]	EN 60947-5-2			
Ambient operating temperature	–40 °C ... +70 °C			
Ambient storage temperature	–40 °C ... +75 °C			

[1] Limit values when operated in short-circuit protected network: max. 8 A.
[2] May not exceed or fall below U_v tolerances.
[3] Without signal strength light bar and load.
[4] Signal transit time with resistive load.
[5] With light/dark ratio 1:1.
[6] Do not bend below 0 °C.
[7] A = V_S connections reverse-polarity protected.
[8] B = inputs and output reverse-polarity protected.
[9] D = outputs overcurrent and short-circuit protected.
[10] Reference voltage: 50 V DC.
[11] Rated voltage 250 V AC, overvoltage category 2.
[12] The sensor complies with the Radio Safety Requirements (EMC) for the indus-trial sector (Radio Safety Class A).
It may cause radio interference if used in residential areas.

Ordering information

Products with the technical data listed above are available even if that specific part number is not defined in this document.
See type code ordering matrix and availability rules on ➜ page 10 for all possible combination of sensors that are available. Contact your local SICK sales representative or look on ➜ www.sick.com/suresense to request information on a part number not shown in this document.

HL18T, Signal strength light bar

- **Type of light:** visible red light
- **Polarisation filter:** ✔
- **Voltage type:** DC
- **Adjustment:** potentiometer (Sensitivity)
- **Switching mode:** Light/dark switching (Q1 = light switching.) (Q2 = dark switching.)

Sensing range max. [1]	Output type	Connection	Connection diagram	Type	Part no.
0.1 m ... 3 m	NPN	Cable, 4-wire, 2 m	Cd-297	HL18T-N1G3BB	1074768
	PNP			HL18T-P1G3BB	1074767
	NPN	M12, 4-pin	Cd-243	HL18T-N4A3BB	1074771
	PNP			HL18T-P4A3BB	1074587

[1] PL80A.

HL18G, AutoAdapt, Signal strength light bar

- **Type of light:** visible red light
- **Polarisation filter:** ✔
- **Voltage type:** DC
- **Adjustment:** potentiometer (Teach-in)
- **Switching mode:** Light/dark switching (Q1 = light switching.) (Q2 = dark switching.)

Sensing range max. [1]	Output type	Connection	Connection diagram	Type	Part no.
0.1 m ... 3 m	NPN	Cable, 4-wire, 2 m	Cd-297	HL18G-N1G3BL	1074764
	PNP			HL18G-P1G3BL	1071040
	NPN	M12, 4-pin	Cd-243	HL18G-N4A3BL	1074765
	PNP			HL18G-P4A3BL	1071037

[1] PL80A.

Characteristic curves

Operating reserve

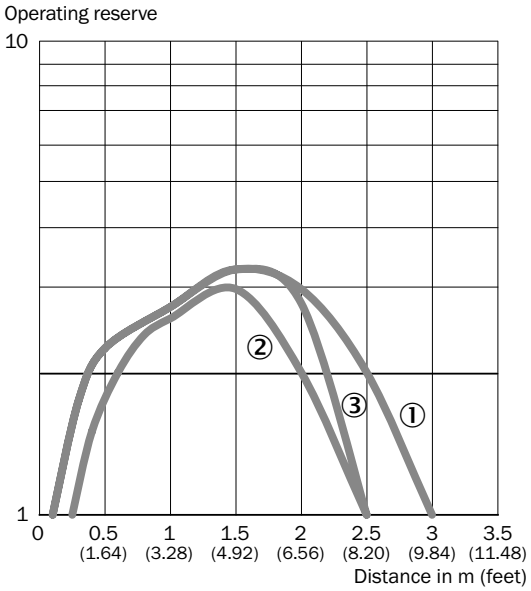

Bar diagrams

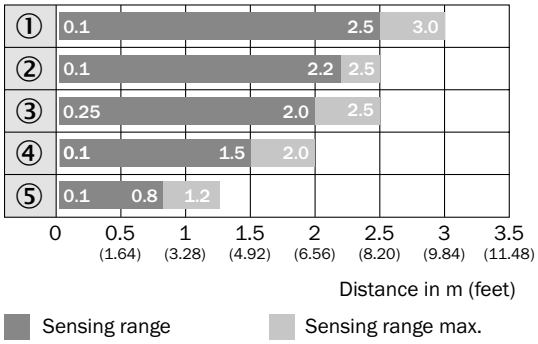

① PL80A
② PL40A
③ P250F
④ PL30A / PL31A
⑤ PL20A

Light spot size

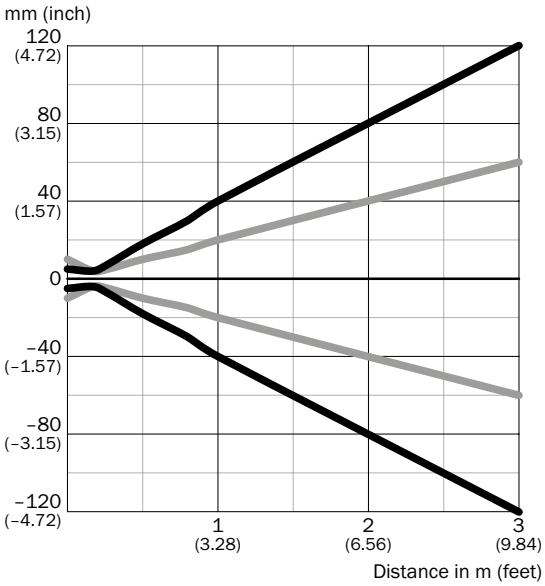

Dimensions in mm (inch)

Sensing range	Vertical	Horizontal
0.5 m (1.64 feet)	18 (0.71)	10 (0.39)
0.8 m (2.62 feet)	30 (1.18)	15 (0.59)
1 m (3.28 feet)	40 (1.57)	20 (0.79)
3 m (9.84 feet)	120 (4.72)	60 (2.36)

Adjustment

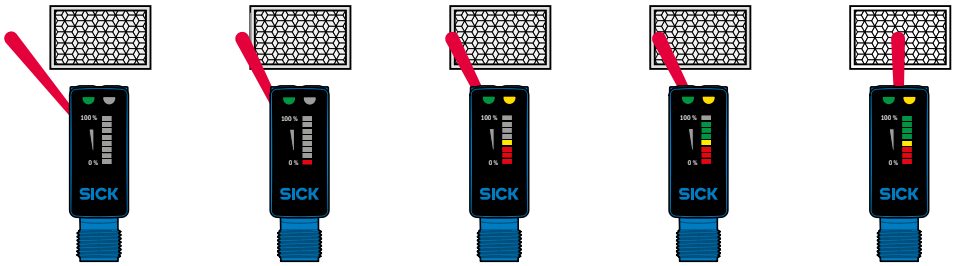

Connection diagram

Cd-243

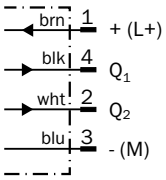

Cd-297

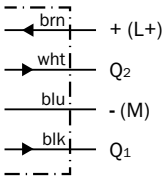

THE SURE WAY TO DETECT ANY OBJECT

Product description

Designed to streamline your sensor selection, the SureSense retro-reflective sensors with laser optic technology are available with an extensive range of connections and configurations (light / dark switch and time delays) all within the same hybrid housing style. All of these options are available with a signal strength light bar, which provides immediate feedback to improve alignment and setup speed.

At a glance

- Intuitive signal strength light bar
- VISTAL “tough as steel” housing
- Precise laser light spot
- Long sensing range of 12 m
- Multiple connection and configuration options with identical housing design

Your benefits

- Light bar ensures fast and simple visual-based alignment
- Durability of VISTAL housing reduces replacement costs and downtime
- Precise detection of small objects, features and holes
- Reduce costs by standardizing sensor mounting, accessories and setup procedures

IP 69K ECOLAB

Additional information

➜ www.sick.com/suresense

For more information, just enter the link or scan the QR code and get direct access to technical data, CAD design models, operating instructions, software, application examples and much more.

8018449/2016-08-26
Subject to change without notice

Detailed technical data

Features

Sensor principle	Photoelectric retro-reflective sensor
Detection principle	Dual lens
Dimensions (W x H x D)	16.2 mm x 45.5 mm x 31.8 mm (Cable) 16.2 mm x 44.9 mm x 31.8 mm (M8) 16.2 mm x 48.5 mm x 31.8 mm (M12) (depending on type)
Housing design (light emission)	Hybrid
Thread diameter (housing)	M18
Sensing range max. [1]	0.1 m ... 12 m
Sensing range [1]	0.1 m ... 10 m
Type of light	Visible red light
Light source [2] [3]	Laser
Light spot size (distance)	Ø 2 mm (5 m)
Wave length	655 nm
Laser class	I
Adjustment	Potentiometer (depending on type)
Time delay [4]	On delay / Off delay (depending on type)
Special features	Light/dark switching selection switch Signal strength light bar (depending on type)

[1] PL80A

[2] Average service life: 50,000 h at T_U = +25 °C

[3] CLASS 1 LASER PRODUCT EN60825-1:2008-05; IEC60825-1:2007-03; Maximum pulse power < 2,5 mW, Pulse length: 4 µs, Wavelength: 650 ... 670 nm; Complies with 21 CFR 1040.10 and 1040.11 except for deviations pursuant to Laser Notice No. 50, dated June 24, 2007

[4] Adjustable: 0 ... 2 s

Mechanics/electronics

Supply voltage [1] [2]	10 V DC ... 30 V DC
Ripple [3]	< 5 V_{pp}
Power consumption [4]	≤ 20 mA
Output type	PNP NPN PNP and NPN PUSH/PULL (depending on type)
Switching mode	Light switching Dark switching Light/dark switching (complementary) (depending on type)
Output current $I_{max.}$	≤ 100 mA
Response time [5]	≤ 0.5 ms
Switching frequency [6]	1,000 Hz
Connection type	Cable, 4-wire [7] Male M8, 4-pin Male M12, 4-pin Cable with male M8, 3-pin Cable with male M8, 4-pin Cable with male M12, 4-pin (depending on type)
Circuit protection	A [8], B [9], D [10]
Protection class [11]	III

Weight	18 g
Polarisation filter	✔
Housing material	VISTAL
Optics material	PMMA
Enclosure rating	IP 67, IP 69K
Ambient operating temperature [12]	–30 °C ... +55 °C
Ambient storage temperature	–40 °C ... +75 °C

[1] Above T_a 45 °C, max. voltage = 24V and max. current = 50 mA.
[2] Limit values when operated in short-circuit protected network: max. 8 A.
[3] May not exceed or fall below U_v tolerances.
[4] Without signal strength light bar and load.
[5] Signal transit time with resistive load.
[6] With light/dark ratio 1:1.
[7] Do not bend below 0 °C.
[8] A = V_S connections reverse-polarity protected.
[9] B = inputs and output reverse-polarity protected.
[10] D = outputs overcurrent and short-circuit protected.
[11] Reference voltage: 50 V DC.
[12] Below Ta = -10 °C, sensor must be turned on at Ta > -10 °C. Sensor cannot be turned on below Ta= -10 °C.

Ordering information

Products with the technical data listed above are available even if that specific part number is not defined in this document.
See type code ordering matrix and availability rules on ➜ page 10 for all possible combination of sensors that are available. Contact your local SICK sales representative or look on ➜ www.sick.com/suresense to request information on a part number not shown in this document.

HL18L, DC, Signal strength light bar

- **Polarisation filter:** ✔
- **Laser class:** I
- **Switching mode:** Light/dark switching (Q1 = light switching.) (Q2 = dark switching.)

Sensing range max. [1]	Output type	Connection	Connection diagram	Type	Part no.
0.1 m ... 12 m	NPN	Cable, 4-wire, 2 m	Cd-297	HL18L-N1G5BA	1074775
	PNP			HL18L-P1G5BA	1071027
	NPN	M12, 4-pin PVC	Cd-243	HL18L-N4A5BA	1074774
	PNP			HL18L-P4A5BA	1071025

[1] PL80A.

Characteristic curves

Operating reserve

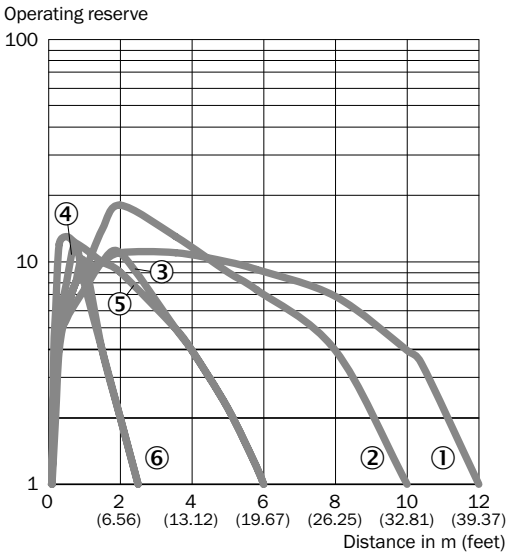

Bar diagrams

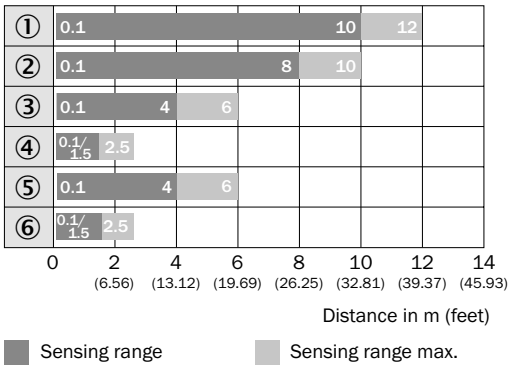

① PL80A
② P250F
③ PL10F
④ PL23 FT
⑤ AC 1000
⑥ IREF6000 (REF-IRF-56)

8018449/2016-08-26
Subject to change without notice

Light spot size

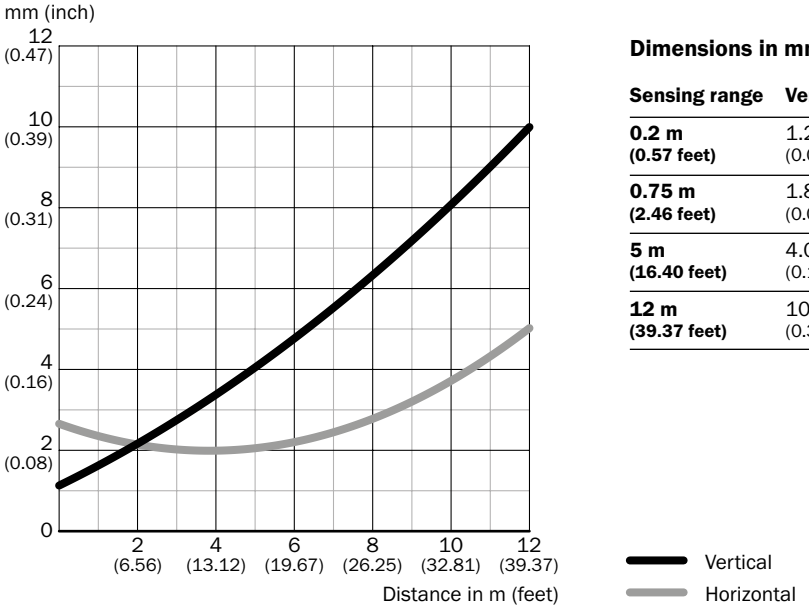

Dimensions in mm (inch)

Sensing range	Vertical	Horizontal
0.2 m (0.57 feet)	1.2 (0.05)	2.65 (0.10)
0.75 m (2.46 feet)	1.8 (0.07)	2.3 (0.09)
5 m (16.40 feet)	4.0 (0.16)	2.2 (0.09)
12 m (39.37 feet)	10.0 (0.39)	5.0 (0.20)

Adjustment

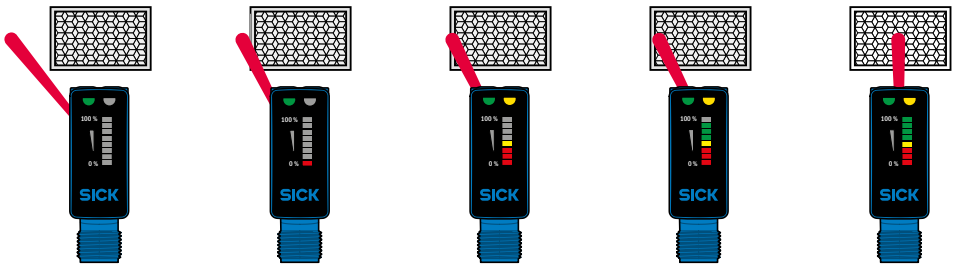

Connection diagram

Cd-243

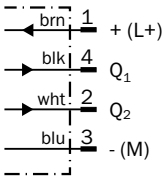

Cd-297

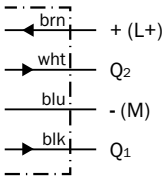

THE SURE WAY TO DETECT ANY OBJECT

Product description

Designed to streamline your sensor selection, the SureSense through beam sensors are available with an extensive range of optics, connections, configurations (light /dark switch and time delays) and power supplies all within the same hybrid housing style. All these options are available with a signal strength light bar, which provides immediate feedback to improve alignment and setup speed.

At a glance

- Intuitive signal strength light bar
- Long sensing ranges: 25 m for red light and 20 m for infrared light
- Multiple optic, connection and configuration options within identical housing
- VISTAL “tough as steel” housing
- PinPoint LED for highly visible and precise light spot
- DC or AC/DC power supply

Your benefits

- Light bar optimizes alignment during installation
- Reduce sensor costs by standardizing mounting, accessories and setup procedures
- Durability of VISTAL housing reduces replacement costs and downtime
- Precise detection with no need for protective measures against lasers

PinPoint 2.0 by SICK

IP 69K

ECOLAB

Additional information

➜ www.sick.com/suresense

For more information, just enter the link or scan the QR code and get direct access to technical data, CAD design models, operating instructions, software, application examples and much more.

8018449/2016-08-26
Subject to change without notice

Detailed technical data

Features

	Visible red light		Infrared light	
	DC	AC/DC	DC	AC/DC
Sensor principle	Through-beam photoelectric sensor			
Dimensions (W x H x D)	16.2 mm x 45.5 mm x 31.8 mm (Cable) 16.2 mm x 44.9 mm x 31.8 mm (M8) 16.2 mm x 48.5 mm x 31.8 mm (M12) (depending on type)	16.2 mm x 45.5 mm x 34.4 mm	16.2 mm x 45.5 mm x 31.8 mm (Cable) 16.2 mm x 44.9 mm x 31.8 mm (M8) 16.2 mm x 48.5 mm x 31.8 mm (M12) (depending on type)	16.2 mm x 45.5 mm x 34.4 mm
Housing design (light emission)	Hybrid			
Thread diameter (housing)	M18			
Sensing range max.	0 m ... 25 m		0 m ... 20 m	
Sensing range	0 m ... 20 m		0 m ... 15 m	
Type of light	Visible red light		Infrared light	
Light source [1]	PinPoint 2.0 LED		LED	
Light spot size (distance)	400 mm x 200 mm (10 m)		Ø 1,400 mm (10 m)	
Wave length	631 nm		850 nm	
Adjustment	Potentiometer (depending on type)			
Time delay [2]	On delay / Off delay (depending on type)			
Special features	Light/dark switching selection switch Signal strength light bar (depending on type)			

[1] Average service life: 100,000 h at T_U = +25 °C

[2] Adjustable: 0 ... 2 s

Mechanics/electronics

	Visible red light		Infrared light	
	DC	AC/DC	DC	AC/DC
Supply voltage [1]	10 V DC ... 30 V DC [1]	21.6 V DC ... 250 V DC [2] 96 V AC ... 250 V AC	10 V DC ... 30 V DC [1]	21.6 V DC ... 250 V DC [2] 96 V AC ... 250 V AC
Ripple [3]	< 5 V_{pp}	–	< 5 V_{pp}	–
Power consumption	≤ 20 mA [4]	≤ 10 mA [5]	≤ 20 mA [4]	≤ 10 mA [5]
Output type	PNP NPN PNP and NPN PUSH/PULL (depending on type)	MOSFET	PNP NPN PNP and NPN PUSH/PULL (depending on type)	MOSFET
Switching mode	Light switching Dark switching Light/dark switching (complementary) (depending on type)	Light switching Dark switching (depending on type)	Light switching Dark switching Light/dark switching (complementary) (depending on type)	Light switching Dark switching (depending on type)
Output current $I_{max.}$	≤ 100 mA			
Response time [6]	≤ 0.5 ms			
Switching frequency [7]	1,000 Hz			

	Visible red light		Infrared light	
	DC	AC/DC	DC	AC/DC
Connection type	Cable, 4-wire [8] Male M8, 4-pin Male M12, 4-pin Cable with male M8, 3-pin Cable with male M8, 4-pin Cable with male M12, 4-pin (depending on type)	Cable, 3-wire [8] Cable with Male micro 1/2-20, 4-pin (depending on type)	Cable, 4-wire [8] Male M8, 4-pin Male M12, 4-pin Cable with male M8, 3-pin Cable with male M8, 4-pin Cable with male M12, 4-pin (depending on type)	Cable, 3-wire [8] Cable with male Micro 1/2-20, 4-pin (depending on type)
Circuit protection	A [9], B [10], D [11]			
Protection class	III [12]	II [13]	III [12]	II [13]
Weight	18 g			
Housing material	VISTAL			
Optics material	PMMA			
Enclosure rating	IP 67, IP 69K			
EMC [14]	EN 60947-5-2			
Ambient operating temperature	–40 °C ... +70 °C			
Ambient storage temperature	–40 °C ... +75 °C			

[1] Limit values when operated in short-circuit protected network: max. 8 A.
[2] Above T_a 60 °C, max. voltage = 120 V.
[3] May not exceed or fall below U_v tolerances.
[4] Without signal strength light bar and load.
[5] Without load. The output load and sensor must use the same power source.
[6] Signal transit time with resistive load.
[7] With light/dark ratio 1:1.
[8] Do not bend below 0 °C.
[9] A = V_S connections reverse-polarity protected.
[10] B = inputs and output reverse-polarity protected.
[11] D = outputs overcurrent and short-circuit protected.
[12] Reference voltage: 50 V DC.
[13] Rated voltage 250 V AC, overvoltage category 2.
[14] The sensor complies with the Radio Safety Requirements (EMC) for the indus-trial sector (Radio Safety Class A).
It may cause radio interference if used in residential areas.

Ordering information

Products with the technical data listed above are available even if that specific part number is not defined in this document.
See type code ordering matrix and availability rules on ➜ page 10 for all possible combination of sensors that are available. Contact your local SICK sales representative or look on ➜ www.sick.com/suresense to request information on a part number not shown in this document.

HSE18, DC, Signal strength light bar

- **Voltage type:** DC

Type of light	Sensing range max.	Output type	Switching mode	Connection	Connection diagram	Type	Part no.
Visible red light	0 m ... 25 m	PNP, NPN	Dark switching [1]	Cable, 4-wire, 2 m	Cd-331	HSE18-A1G2BA	1071744
				M12, 4-pin	Cd-330	HSE18-A4A2BA	1071750
			Light switching [1]	M12, 4-pin	Cd-330	HSE18-B4A2BA	1071751
		PNP	Light/dark switching [2]	Cable, 4-wire, 2 m	Cd-331	HSE18-P1G2BA	1071842

[1] Q1 = PNP; Q2 = NPN.
[2] Q1 = light switching; Q2 = dark switching.

Type of light	Sensing range max.	Output type	Switching mode	Connection	Connection diagram	Type	Part no.
Infrared light	0 m ... 20 m	PNP	Light/dark switching [2]	Cable, 4-wire, 2 m	Cd-331	HSE18-P1G1BA	1071841
				M12, 4-pin	Cd-330	HSE18-P4A1BA	1074762
		NPN	Light/dark switching [2]	M12, 4-pin	Cd-330	HSE18-N4A1BA	1074763

[1] Q1 = PNP; Q2 = NPN.
[2] Q1 = light switching; Q2 = dark switching.

HSE18, AC/DC

- **Type of light:** visible red light
- **Voltage type:** AC/DC

Type of light	Sensing range max.	Output type	Switching mode	Connection	Connection diagram	Type	Part no.
Visible red light	0 m ... 25 m	MOSFET	Dark switching	Cable with connector Micro (1/2”-20), 4-pin 150 mm PVC	Cd-334	HSE18-M5B2AA	1071047

Characteristic curves

Red light

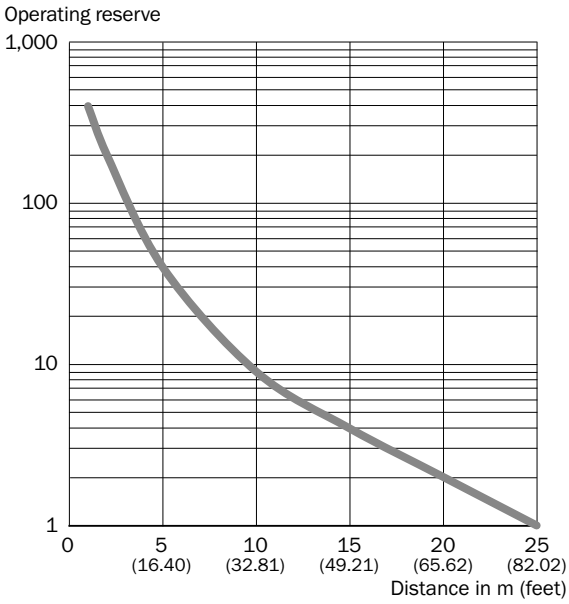

Infrared light

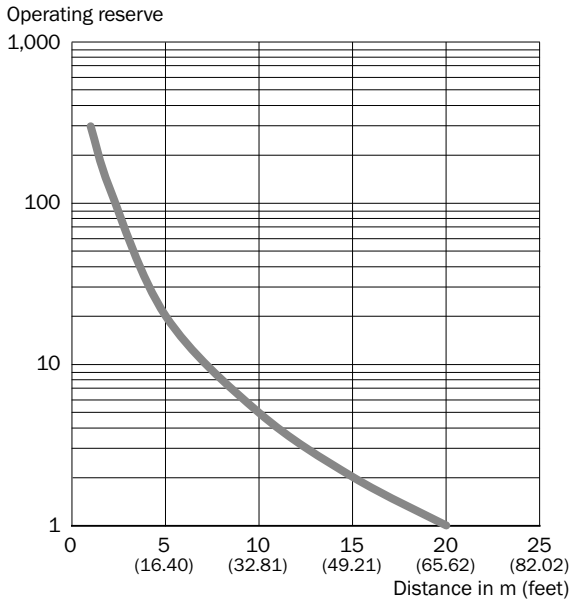

Bar diagrams

Red light

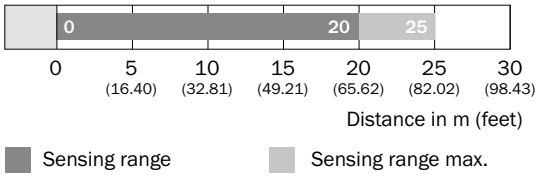

Infrared light

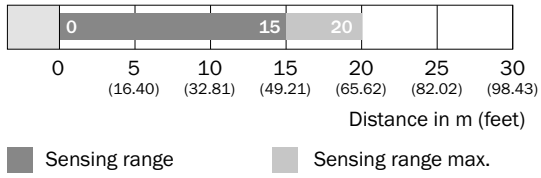

Light spot size

Red light

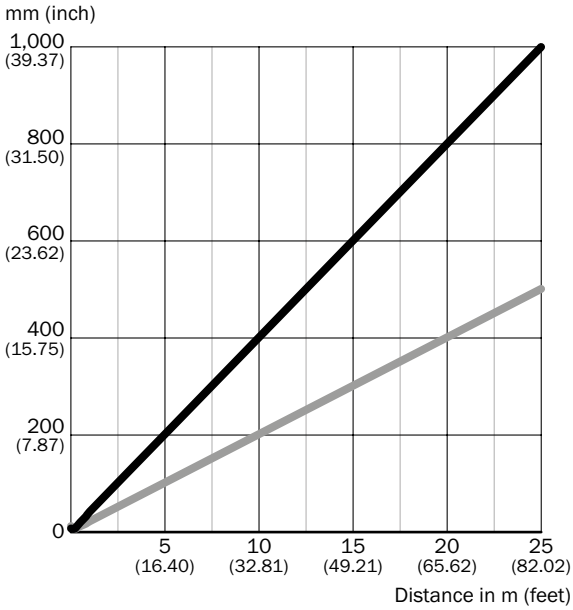

Dimensions in mm (inch)

Sensing range	Horizontal	Vertical
0.5 m (1.64 feet)	18 (0.71)	10 (0.39)
1 m (3.28 feet)	40 (1.57)	20 (0.79)
6.5 m (21.33 feet)	260 (10.24)	130 (5.12)
25 m (82.02 feet)	1,000 (39.37)	500 (19.67)

Horizontal
Vertical

Infrared light

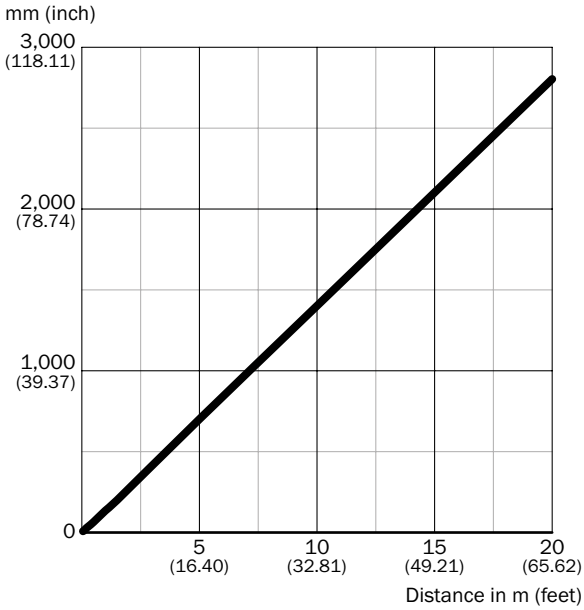

Dimensions in mm (inch)

Sensing range	Diameter
0.5 m (1.64 feet)	65 (0.21)
1 m (3.28 feet)	135 (5.31)
5 m (16.40 feet)	700 (27.56)
20 m (65.62 feet)	2,800 (110.24)

Diameter

Adjustment

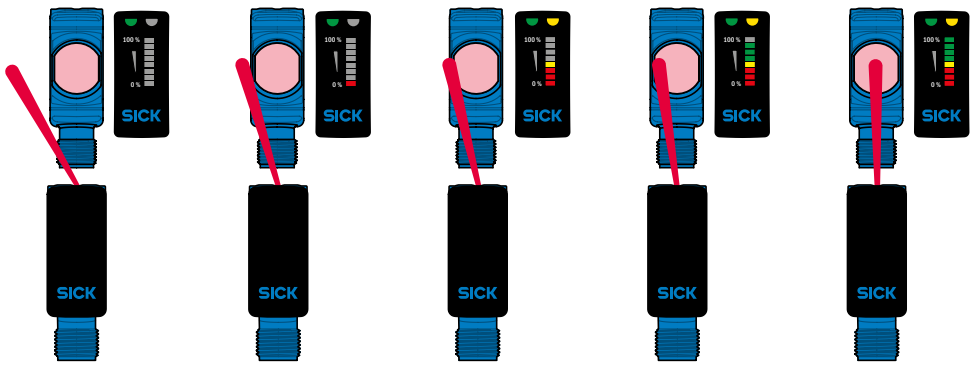

8018449/2016-08-26
Subject to change without notice

Connection diagram

Cd-330

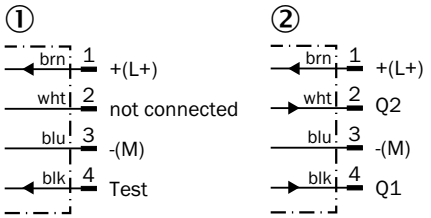

① Sender
② Receiver

Cd-331

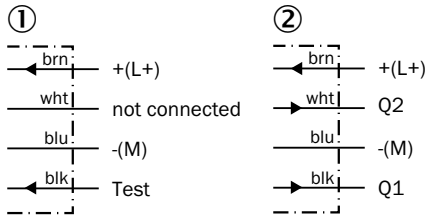

① Sender
② Receiver

Cd-334

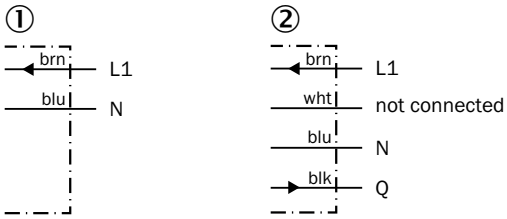

THE SURE WAY TO DETECT ANY OBJECT

Product description

Designed to streamline your sensor selection, the SureSense through-beam sensors with laser optic technology are available with an extensive range of connections and configurations (light /dark switch and time delays) all within the same hybrid housing style. All these options are available with a signal strength light bar, which provides immediate feedback to improve alignment and setup speed.

At a glance

- Intuitive signal strength light bar
- Precise laser light spot
- Long sensing range of 60 m
- Multiple connection and configuration options with identical housing
- VISTAL “tough as steel” housing

Your benefits

- Light bar optimizes alignment during installation
- Precise detection of small objects, features and holes
- Reduce sensor costs by standardizing mounting, accessories and setup procedures
- Durability of VISTAL housing reduces replacement costs and downtime

IP 69K ECOLAB

Additional information

➜ www.sick.com/suresense

For more information, just enter the link or scan the QR code and get direct access to technical data, CAD design models, operating instructions, software, application examples and much more.

8018449/2016-08-26
Subject to change without notice

Detailed technical data

Features

Sensor principle	Through-beam photoelectric sensor
Dimensions (W x H x D)	16.2 mm x 45.5 mm x 31.8 mm (Cable) 16.2 mm x 44.9 mm x 31.8 mm (M8) 16.2 mm x 48.5 mm x 31.8 mm (M12) (depending on type)
Housing design (light emission)	Hybrid
Thread diameter (housing)	M18
Sensing range max.	0 m ... 60 m
Sensing range	0 m ... 50 m
Type of light	Visible red light
Light source [1) 2)]	Laser
Light spot size (distance)	Ø 2 mm (1.5 m)
Wave length	655 nm
Laser class	I
Adjustment	Potentiometer (depending on type)
Time delay [3)]	On delay / Off delay (depending on type)
Special features	Light/dark switching selection switch Signal strength light bar (depending on type)

[1)] Average service life 50,000 h at T_A = +25 °C

[2)] CLASS 1 LASER PRODUCT EN60825-1:2008-05; IEC60825-1:2007-03; Maximum pulse power < 2,5 mW, Pulse length: 4 µs, Wavelength: 650 ... 670 nm; Complies with 21 CFR 1040.10 and 1040.11 except for deviations pursuant to Laser Notice No. 50, dated June 24, 2007

[3)] Adjustable: 0 ... 2 s

Mechanics/electronics

Supply voltage [1) 2)]	10 V DC ... 30 V DC
Ripple [3)]	< 5 V_{pp}
Power consumption [4)]	≤ 20 mA
Output type	PNP NPN PNP and NPN PUSH/PULL (depending on type)
Switching mode	Light switching Dark switching Light/dark switching (complementary) (depending on type)
Output current $I_{max.}$	≤ 100 mA
Response time [5)]	≤ 0.5 ms
Switching frequency [6)]	1,000 Hz
Connection type	Cable, 4-wire [7)] Male M8, 4-pin Male M12, 4-pin Cable with male M8, 3-pin Cable with male M8, 4-pin Cable with male M12, 4-pin (depending on type)
Circuit protection	A [8)], B [9)], D [10)]
Protection class [11)]	III
Weight	18 g
Housing material	VISTAL

Optics material	PMMA
Enclosure rating	IP 67, IP 69K
Ambient operating temperature [12]	–30 °C ... +55 °C
Ambient storage temperature	–40 °C ... +75 °C

[1] Above T_a 45 °C, max. voltage = 24V and max. current = 50 mA.
[2] Limit values when operated in short-circuit protected network: max. 8 A.
[3] May not exceed or fall below U_v tolerances.
[4] Without signal strength light bar and load.
[5] Signal transit time with resistive load.
[6] With light/dark ratio 1:1.
[7] Do not bend below 0 °C.
[8] A = V_S connections reverse-polarity protected.
[9] B = inputs and output reverse-polarity protected.
[10] D = outputs overcurrent and short-circuit protected.
[11] Reference voltage: 50 V DC.
[12] Below Ta = -10 °C, sensor must be turned on at Ta > -10 °C. Sensor cannot be turned on below Ta= -10 °C.

Ordering information

Products with the technical data listed above are available even if that specific part number is not defined in this document.
See type code ordering matrix and availability rules on ➜ page 10 for all possible combination of sensors that are available. Contact your local SICK sales representative or look on ➜ www.sick.com/suresense to request information on a part number not shown in this document.

HSE18L, DC, Signal strength light bar

- **Type of light:** visible red light
- **Laser class:** I
- **Voltage type:** DC
- **Switching mode:** Light/dark switching (Q1 = light switching.) (Q2 = dark switching.)

Sensing range max.	Output type	Connection	Connection diagram	Type	Part no.
0 m ... 60 m	NPN	Cable, 4-wire, 2 m	Cd-331	HSE18L-N1G5BA	1074781
	PNP			HSE18L-P1G5BA	1074780
	NPN	M12, 4-pin	Cd-330	HSE18L-N4A5BA	1074778
	PNP			HSE18L-P4A5BA	1074776

Characteristic curves

Operating reserve

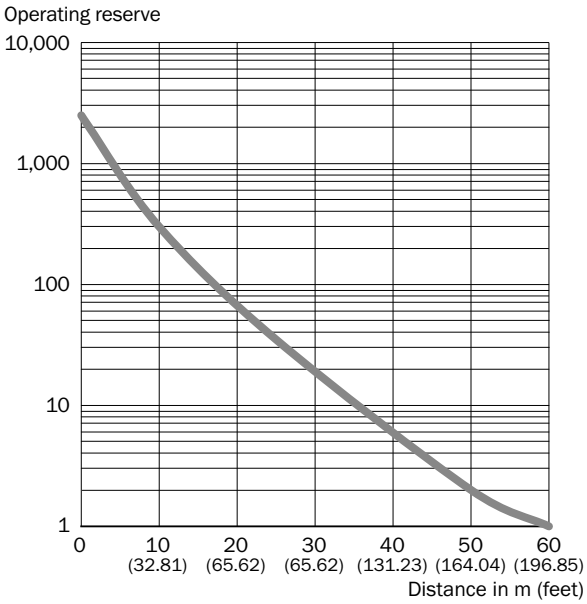

Bar diagrams

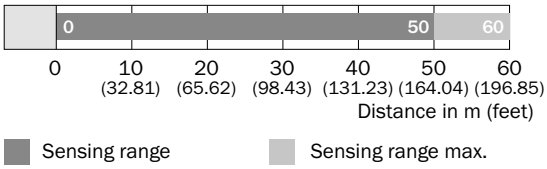

Light spot size

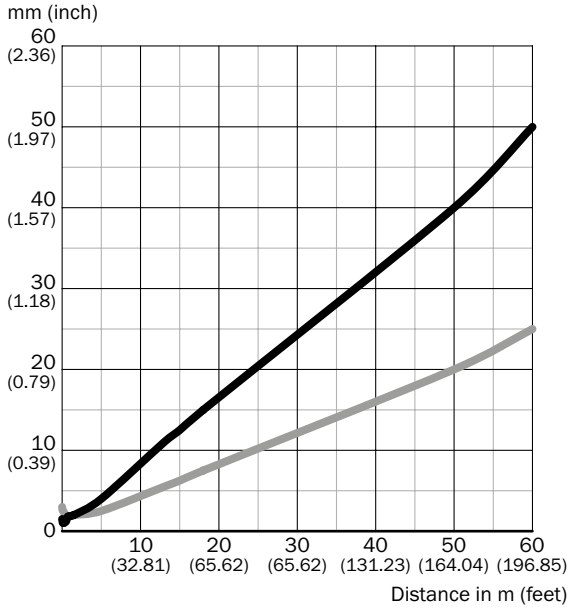

Dimensions in mm (inch)

Sensing range	Vertical	Horizontal
0.3 m (0.98 feet)	1.2 (0.05)	2.2 (0.09)
1.5 m (4.92 feet)	2.0 (0.08)	2.0 (0.08)
18 m (59.06 feet)	15.0 (0.59)	7.5 (0.30)
60 m (196.85 feet)	50.0 (1.97)	25.0 (0.98)

Vertical
Horizontal

Adjustment

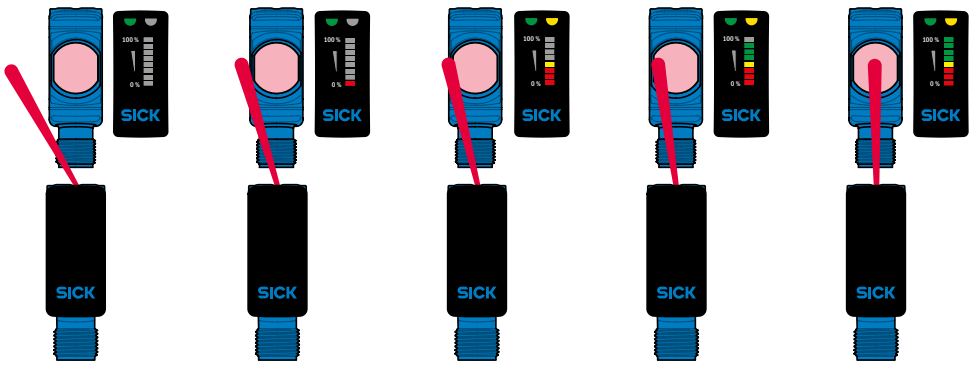

Connection diagram

Cd-330

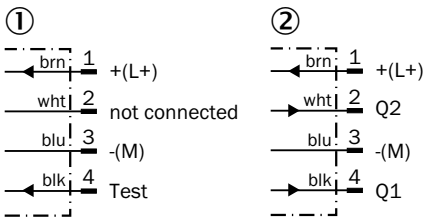

① Sender
② Receiver

Cd-331

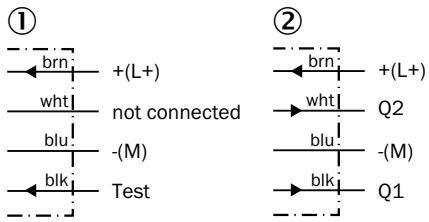

① Sender
② Receiver

Dimensional drawings

Dimensions in mm (inch)

H18, DC, male connector M12

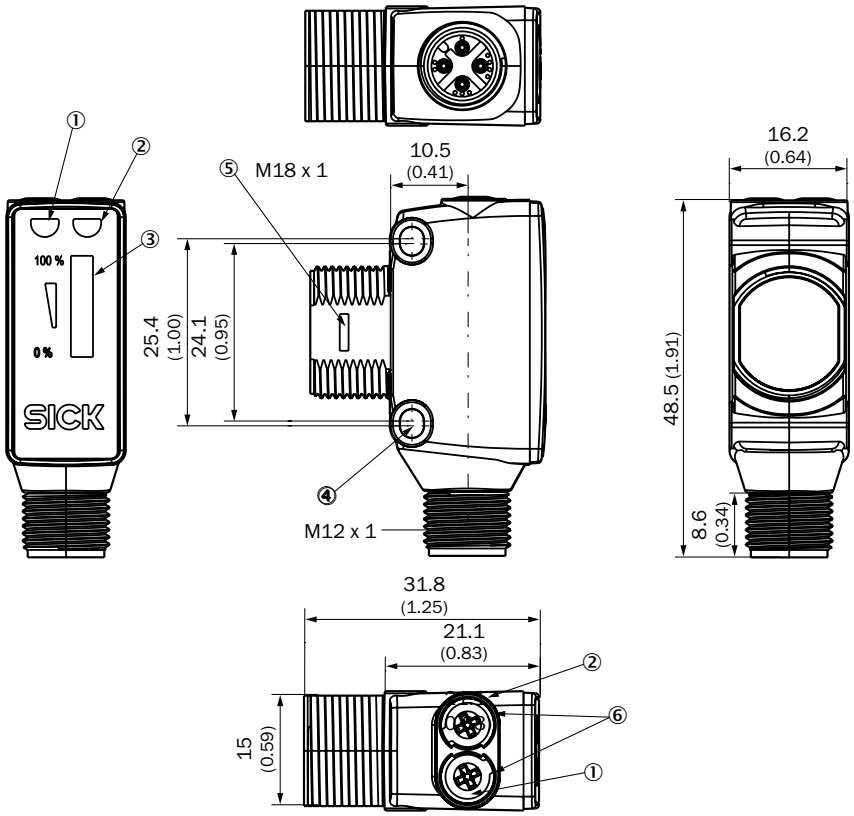

H18, DC, cable

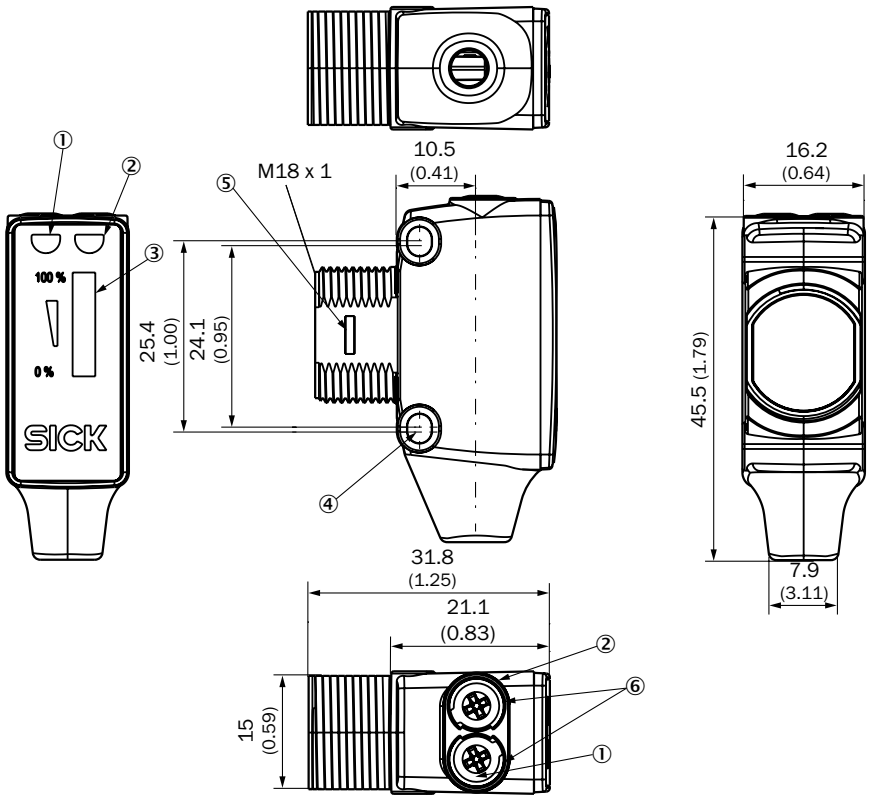

8018449/2016-08-26
Subject to change without notice

H18, DC, male connector M8

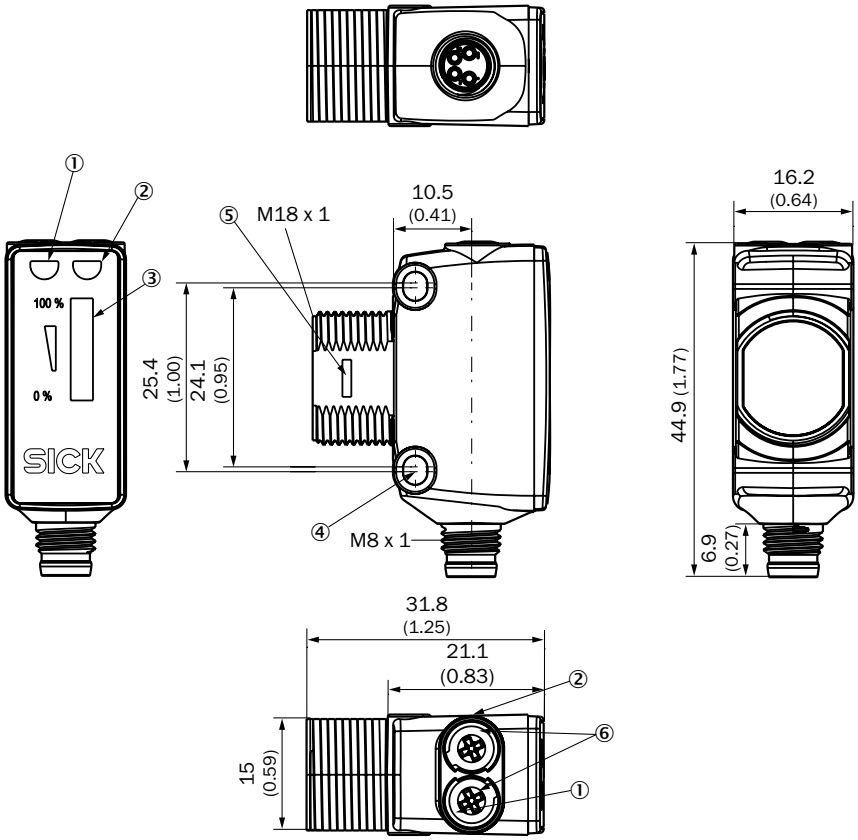

H18, AC, cable

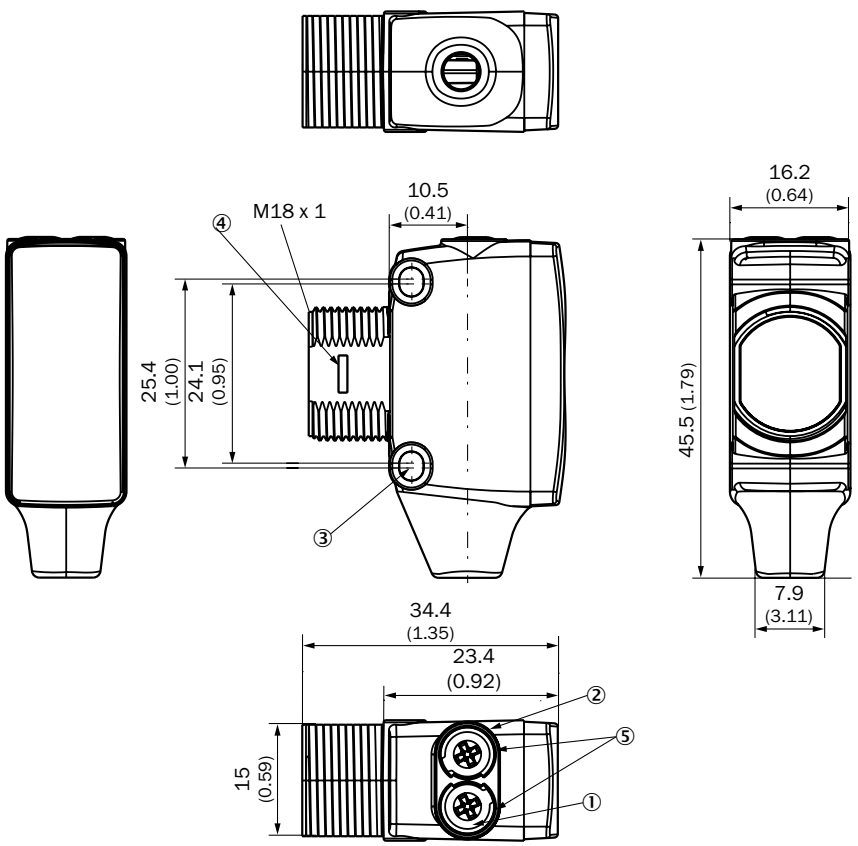

Accessories

Mounting brackets and mounting plates

Mounting brackets

Figure	Material	Description	Type	Part no.
	Steel, zinc coated	Mounting plate for M18 sensors	BEF-WG-M18	5321870
		Mounting bracket, M18 thread	BEF-WN-M18	5308446

Terminal and alignment brackets

Figure	Material	Description	Type	Part no.
	Plastic (PA12), glass-fiber reinforced	Clamping block for round sensors M18, without fixed stop	BEF-KH-M18	2051481
		Clamping block for round sensors M18, with fixed stop	BEF-KHF-M18	2051482

Other mounting accessories

Description	Type	Part no.
Fixation ring for SureSense sensors	Fixation ring, SureSense	2082782
Mounting bracket	MB-BS18MM-M4	2049694

Universal bar clamp systems

Figure	Material	Description	Type	Part no.
	Zinc diecast	Universal bar clamp for mounting bars with 12 mm diameter	BEF-KHS-KH3	5322626
	Zinc plated steel (sheet), Diecast zinc (clamp)	Plate N06 for universal clamp bracket, M18	BEF-KHS-N06	2051612
	Steel, zinc coated	Mounting bar, straight, 200 mm, steel	BEF-MS12G-A	4056054
		Mounting bar, straight, 300 mm, steel	BEF-MS12G-B	4056055
		Mounting bar, L-shaped, 150 mm x 150 mm, steel	BEF-MS12L-A	4056052
		Mounting bar, L-shaped, 250 x 250 mm, steel	BEF-MS12L-B	4056053
		Mounting bar, Z-shaped, 150 mm x 70 mm x 150 mm, steel	BEF-MS12Z-A	4056056
		Mounting bar, Z-shaped, 150 mm x 70 mm x 250 mm, steel	BEF-MS12Z-B	4056057
	Aluminum	Bar clamp for bar diameter of 12 mm (fixing the mounting rod)	BEF-RMC-D12	5321878

Dimensional drawings → page 69

8018449/2016-08-26
Subject to change without notice

Plug connectors and cables

Connecting cables with female M8, 4-pin, PVC, chemical resistant

- **Cable material:** PVC
- **Connector material:** TPU
- **Enclosure rating:** IP 67

Figure	Connection type head A	Connection type head B	Connecting cable	Type	Part no.
	Female connector, M8, 4-pin, straight	Cable, open conductor heads	2 m, 4-wire	DOL-0804-G02M	6009870
			5 m, 4-wire	DOL-0804-G05M	6009872
			10 m, 4-wire	DOL-0804-G10M	6010754
	Female connector, M8, 4-pin, angled	Cable, open conductor heads	2 m, 4-wire	DOL-0804-W02M	6009871
			5 m, 4-wire	DOL-0804-W05M	6009873
			10 m, 4-wire	DOL-0804-W10M	6010755

Connecting cables with female M8, 4-pin, PP, hygienic systems

- **Cable material:** PP
- **Connector material:** PP
- **Enclosure rating:** IP 67, IP 69K

Figure	Connection type head A	Connection type head B	Connecting cable	Type	Part no.
	Female connector, M8, 4-pin, straight	Cable, open conductor heads	2 m, 4-wire	DOL-0804-G02MN	6033670
			5 m, 4-wire	DOL-0804-G05MN	6033671
			10 m, 4-wire	DOL-0804-G10MN	6033672
	Female connector, M8, 4-pin, angled	Cable, open conductor heads	2 m, 4-wire	DOL-0804-W02MN	6033673
			5 m, 4-wire	DOL-0804-W05MN	6033674
			10 m, 4-wire	DOL-0804-W10MN	6033675

Connecting cables with female M12, 4-pin, PVC, chemical resistant

- **Cable material:** PVC
- **Connector material:** TPU
- **Enclosure rating:** IP 67

Figure	Connection type head A	Connection type head B	Connecting cable	Type	Part no.
 Illustration may differ	Female connector, M12, 4-pin, straight	Cable, open conductor heads	2 m, 4-wire	DOL-1204-G02M	6009382
			5 m, 4-wire	DOL-1204-G05M	6009866
			10 m, 4-wire	DOL-1204-G10M	6010543
 Illustration may differ	Female connector, M12, 4-pin, angled	Cable, open conductor heads	2 m, 4-wire	DOL-1204-W02M	6009383
			5 m, 4-wire	DOL-1204-W05M	6009867
			10 m, 4-wire	DOL-1204-W10M	6010541

Connecting cables with female M12, 4-pin, PVC, hygienic systems

- **Cable material:** PVC
- **Connector material:** PUR
- **Enclosure rating:** IP 65, IP 67, IP 69K

Figure	Connection type head A	Connection type head B	Connecting cable	Type	Part no.
	Female connector, M12, 4-pin, straight	Cable, open conductor heads	2 m, 4-wire	DOL-1204-G02MNI	6052613
			5 m, 4-wire	DOL-1204-G05MNI	6052615
			10 m, 4-wire	DOL-1204-G10MNI	6052617

Figure	Connection type head A	Connection type head B	Connecting cable	Type	Part no.
	Female connector, M12, 4-pin, angled	Cable, open conductor heads	2 m, 4-wire	DOL-1204-W02MNI	6052614
			5 m, 4-wire	DOL-1204-W05MNI	6052616
			10 m, 4-wire	DOL-1204-W10MNI	6052618

Female connectors (ready to assemble) M12, 4-pin

Figure	Connection type head A	Connection type head B	Connector material	Enclosure rating	Type	Part no.
	Female connector, M12, 4-pin, straight	Screw-type terminals	PA	IP 67	DOS-1204-G	6007302
				IP 67 IP 69K	DOS-1204-GX	6026528
	Female connector, M12, 4-pin, angled	Screw-type terminals	PBT	IP 67	DOS-1204-W	6007303
				IP 67 IP 69K	DOS-1204-WX	6025570

Male connectors (ready to assemble) M12, 4-pin

- **Enclosure rating:** IP 67

Figure	Connection type head A	Connection type head B	Connector material	Type	Part no.
	Male connector, M12, 4-pin, straight	Screw-type terminals	PA	STE-1204-G	6009932
	Male connector, M12, 4-pin, angled	Screw-type terminals	PBT	STE-1204-W	6022084

Dimensional drawings ➜ page 71

8018449/2016-08-26

Reflectors

Angular

Figure	Material	Description	Type	Part no.	HL18	HL18G/T	HL18L
	PMMA/ABS	Rectangular, screw connection, 47 mm x 47 mm	P250	5304812	●	●	–
		Rectangular, screw connection, 38 mm x 15 mm	PL20A	1012719	●	●	–
		Rectangular, self-adhesive, 38 mm x 15 mm	PL21A	1015172	●	●	–
		Rectangular, screw connection, 56 mm x 28 mm	PL30A	1002314	●	●	–
		Rectangular, screw connection, 37 mm x 56 mm	PL40A	1012720	●	●	–
		Rectangular, screw connection, 80 mm x 80 mm	PL80A	1003865	●	●	–

Fine triple reflectors

Figure	Material	Description	Type	Part no.	HL18	HL18G/T	HL18L
	PMMA/ABS	Fine triple, screw connection, suitable for laser sensors, 47 mm x 47 mm	P250F	5308843	–	–	●
		Fine triple, self-adhesive, suitable for laser sensors, Ø 23 mm	P25F-1	5319385	–	–	●
		Reflector with microprismatic reflex tape REF-AC1000, suitable for laser sensors, see alignment note, 23 mm x 23 mm	P41F	5315128	–	–	●
		Fine triple, screw connection, suitable for laser sensors, 18 mm x 18 mm	PL10F	5311210	–	–	●
	Plastic	Fine triple, chemically resistant, screw connection, 18 mm x 18 mm	PL10F CHEM	5321636	–	–	●
	PMMA/ABS	Fine triple, screw connection, suitable for laser sensors, 38 mm x 16 mm	PL20F	5308844	–	–	●
	Plastic	Fine triple, chemically resistant, screw connection, suitable for laser sensors, 16 mm x 38 mm	PL20F-CHEM	5326089	–	–	●
	PMMA/ABS	Fine triple, screw connection, suitable for laser sensors, 56 mm x 28 mm	PL30F	5326523	–	–	●
		Fine triple, screw connection, suitable for laser sensors, 76 mm x 45 mm	PL81-1F	5325060	–	–	●

Reflective tape

Figure	Description	Type	Part no.	HL18	HL18G/T	HL18L
	Suitable for laser sensors, self-adhesive, cut, see alignment note, 56.3 mm x 56.3 mm	REF-AC1000-56	4063030	–	–	●
	Self-adhesive, 50 mm x 60 mm	REF-IRF-56	5314244	●	●	–
	Self-adhesive, customizable length by roll, 5 cm x 22.8 m)	REF-PLUS-50-K	4051185	●	●	–
	Self-adhesive, roll, 50 mm x 22.8 m	REF-PLUS-R50	5319981	●	●	–

Round

Figure	Material	Description	Type	Part no.	HL18	HL18G/T	HL18L
	PMMA/ABS	Round, screw connection	C110A	5304549	●	●	–
		Round, self-adhesive	PL22-2	1003621	●	●	–

Special reflectors

Figure	Material	Description	Type	Part no.	HL18	HL18G/T	HL18L
	Stainless steel V4A (1.4404, 316L)	Stainless steel reflector, hygienic design, chemically resistant, Enclosure rating IP 69K, D12-adapter shaft, 25 mm x 25 mm	PLH25-D12	2063404	●	●	–
		Stainless steel reflector, hygienic design, chemically resistant, Enclosure rating IP 69K, M12-adapter thread, 25 mm x 25 mm	PLH25-M12	2063403	●	●	–
		Stainless steel reflector, wash-down design, chemically resistant, Enclosure rating IP 69K, screw connection, 14 mm x 14 mm	PLV14-A	2063405	●	●	–

Dimensional drawings ➜ page 73

8018449/2016-08-26

Dimensional drawings Mounting brackets and mounting plates

BEF-WG-M18

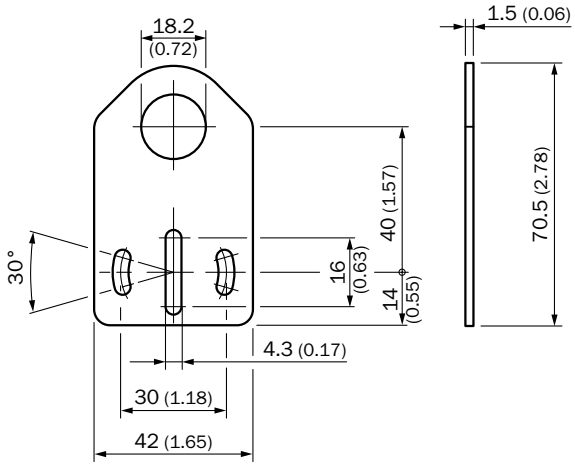

BEF-WN-M18

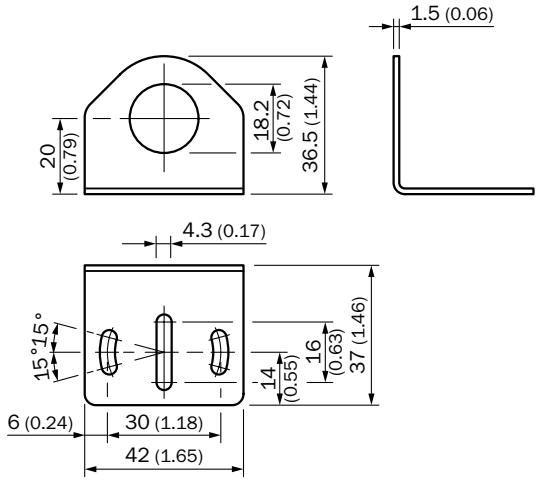

Dimensional drawings Terminal and alignment brackets

BEF-KH-M18

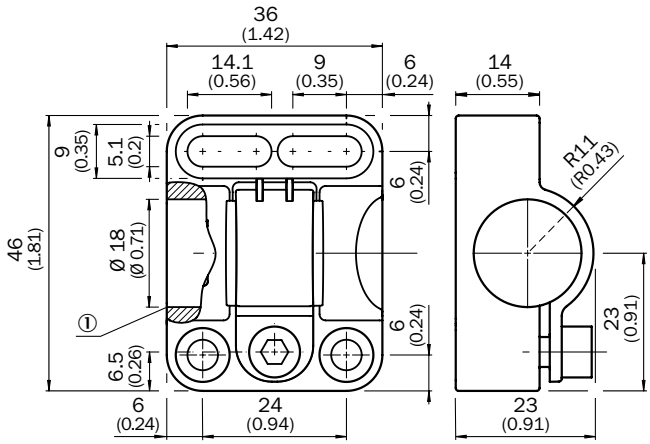

① Without fixed stop

BEF-KHF-M18

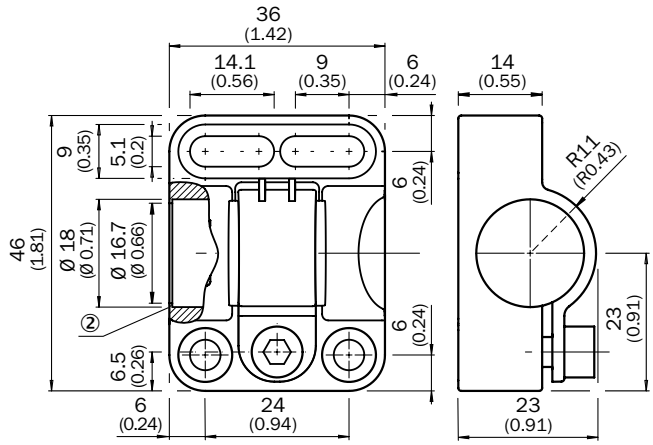

② With fixed stop

Dimensional drawings other mounting accessories

Fixation ring

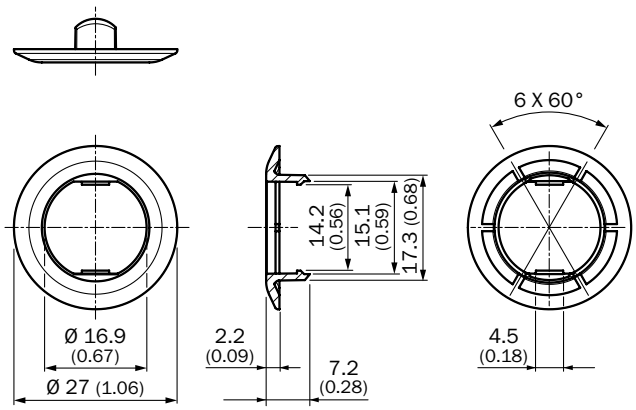

MB-BS18MM-M4

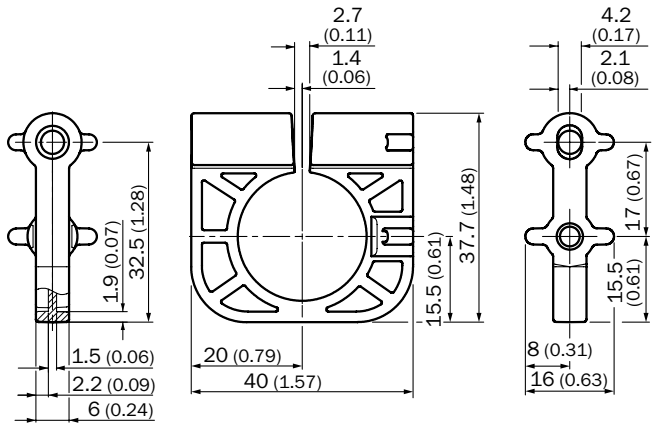

Dimensional drawings Universal bar clamp systems

BEF-KHS-KH3

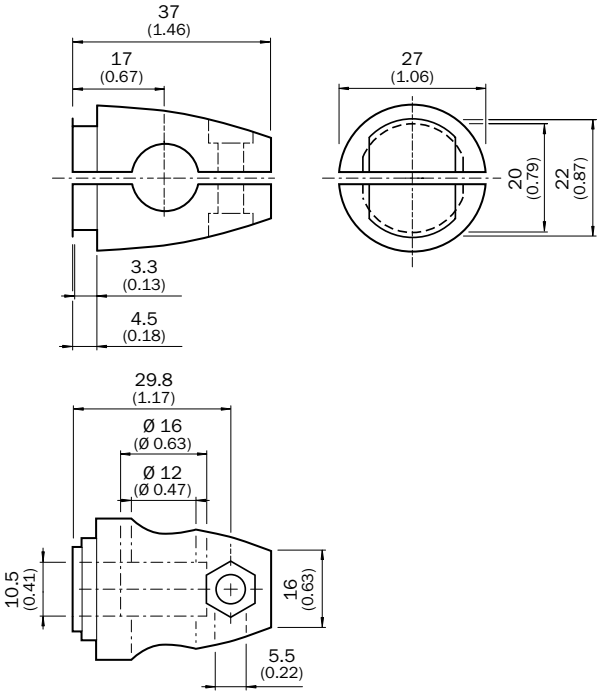

BEF-KHS-N06

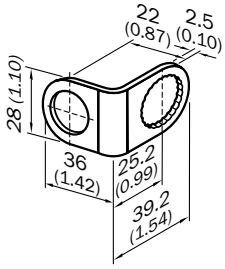

BEF-MS12G-A, BEF-MS12G-B

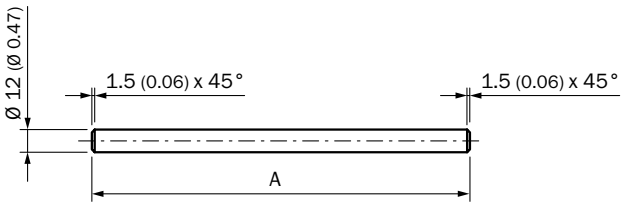

① BEF-MS12G-(N)A: A = 200 mm
② BEF-MS12G-(N)B: A = 300 mm

BEF-MS12L-A, BEF-MS12L-B

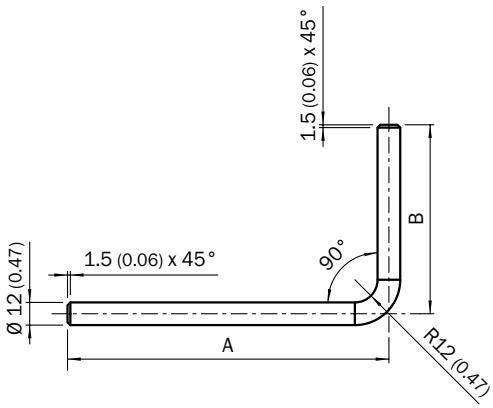

① BEF-MS12L-(N)A: A = 200 mm, B = 150 mm
② BEF-MS12L-(N)B: A = 250 mm, B = 250 mm

BEF-MS12Z-A, BEF-MS12Z-B

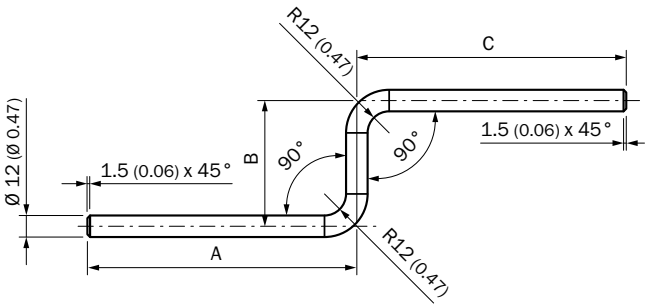

① BEF-MS12Z-(N)A: A = 150 mm, B = 70 mm, C = 150 mm
② BEF-MS12Z-(N)B: A = 150 mm, B = 70 mm, C = 250 mm

BEF-RMC-D12

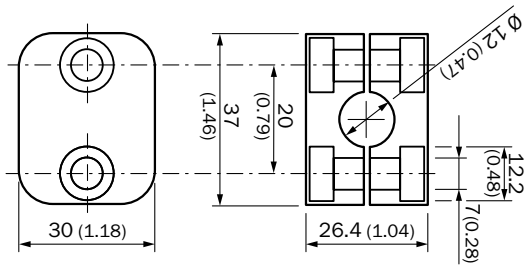

8018449/2016-08-26

Dimensional drawings Plug connectors and cables

DOL-0804-GxxM

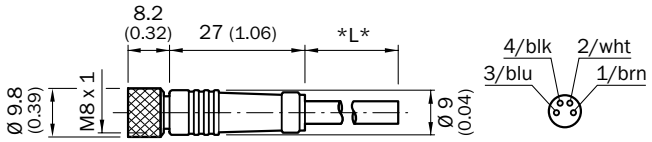

DOL-0804-GxxMN

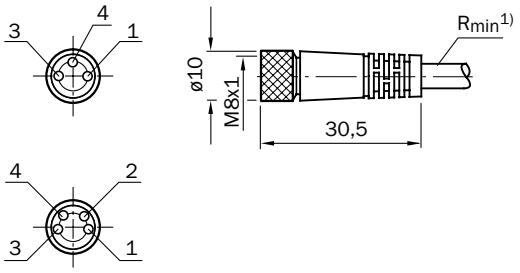

DOL-0804-WxxM

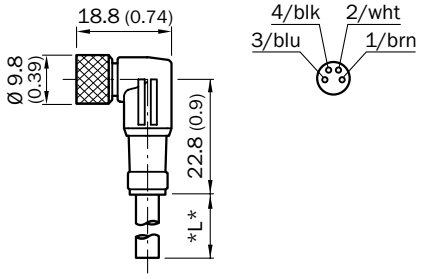

DOL-0804-WxxMN

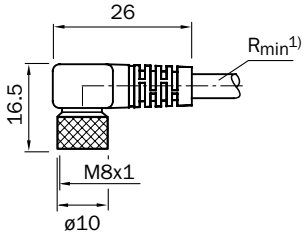

DOL-1204-GxxM

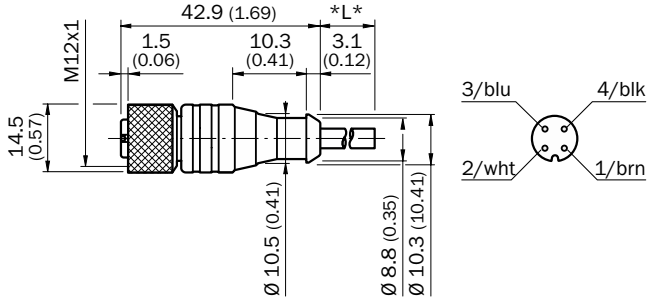

DOL-1204-GxxMNI

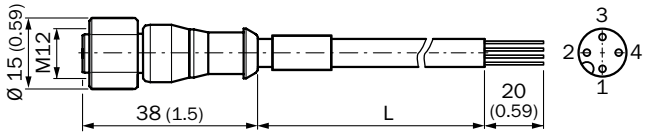

① Brn
② Blk
③ Blk
④ Wht

DOL-1204-WxxM

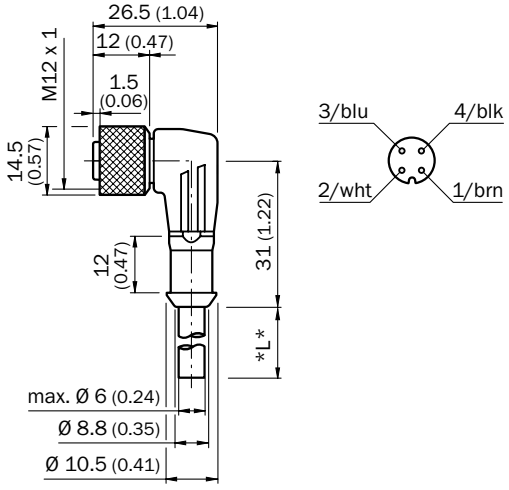

DOL-1204-WxxMNI

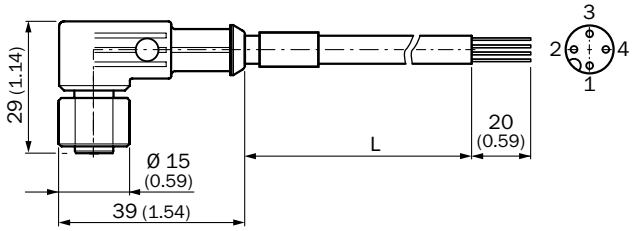

① Brn
② Blk
③ Blu
④ Wht

DOS-1204-G

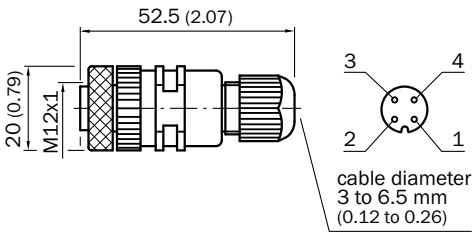

DOS-1204-W

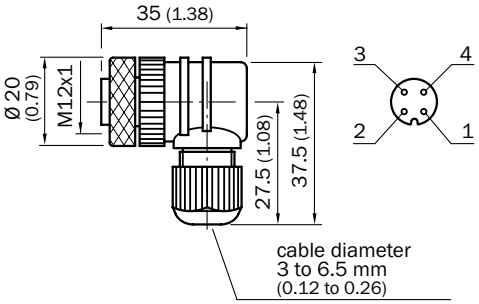

STE-1204-G

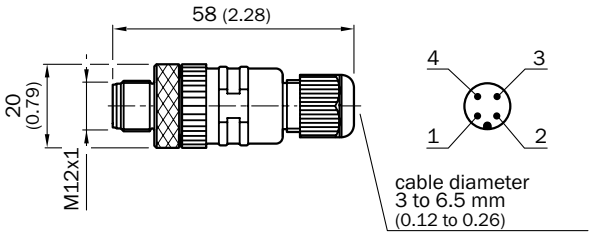

STE-1204-W

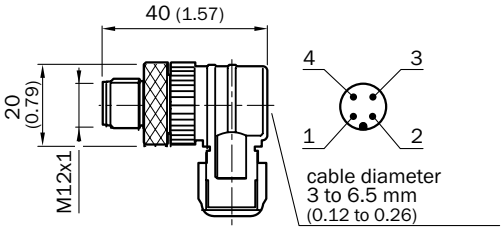

Dimensional drawings Reflectors

P250

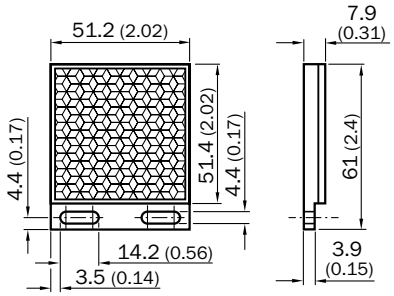

PL20A

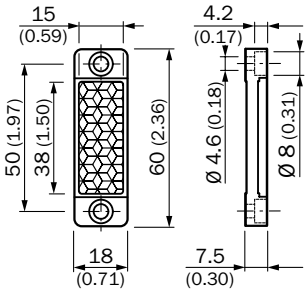

PL21A

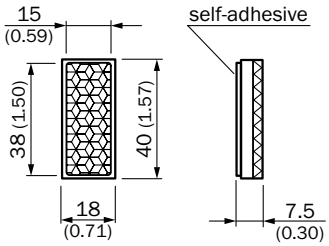

PL30A

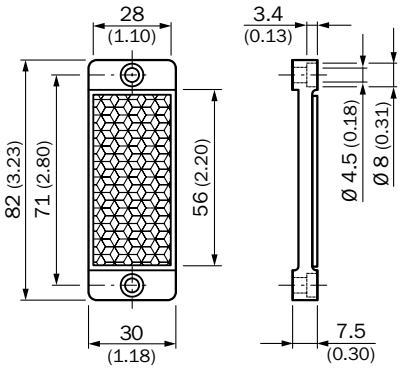

PL40A

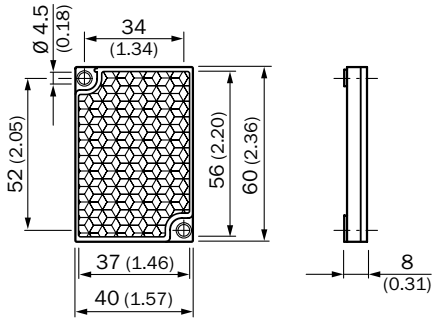

PL80A

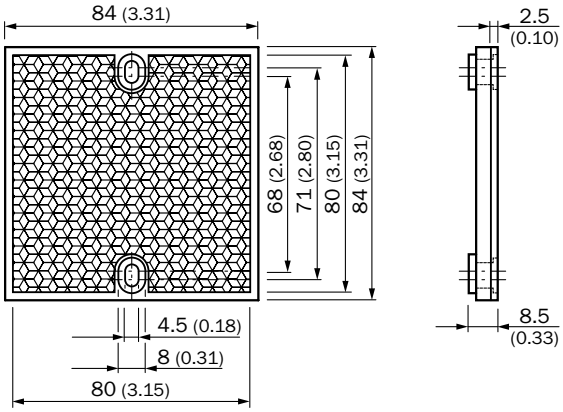

P250F

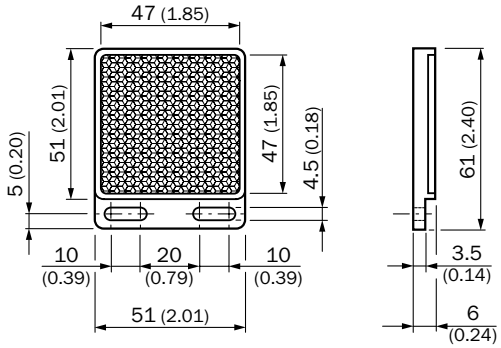

P25F-1

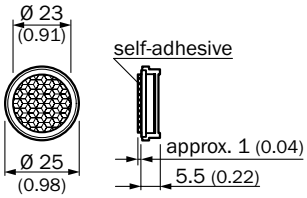

P41F

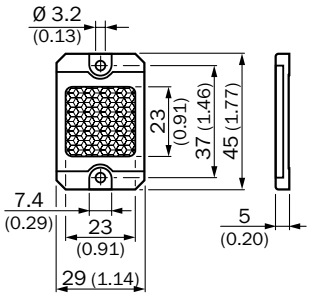

PL10F

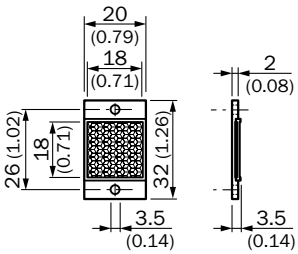

PL10F CHEM

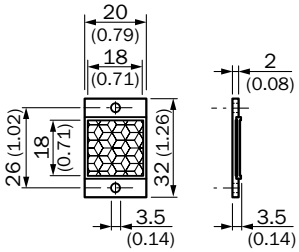

PL20F

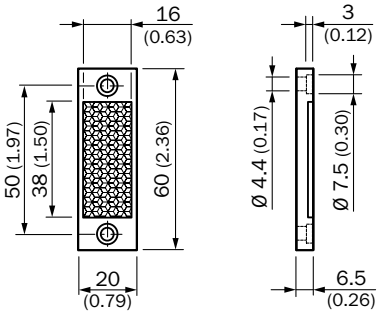

PL20F-CHEM

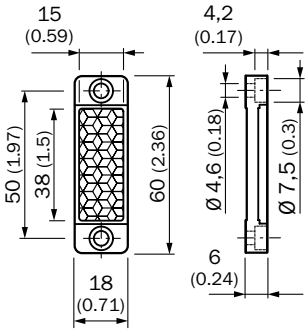

PL30F

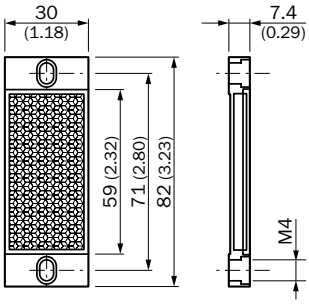

PL81-1F

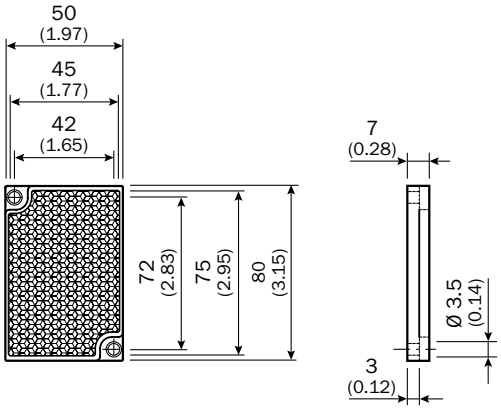

REF-AC1000-56

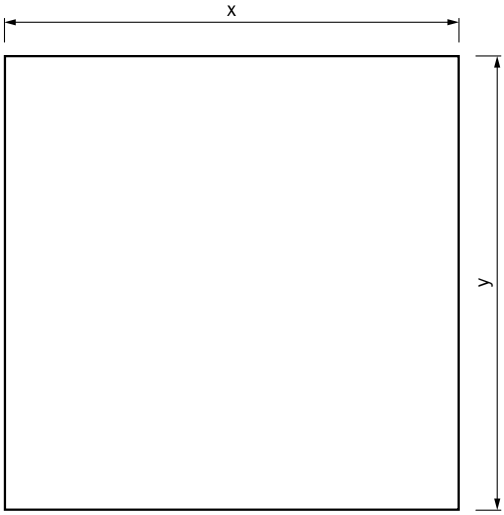

① X = 56,3 mm
② Y = 56,3 mm

REF-IRF-56

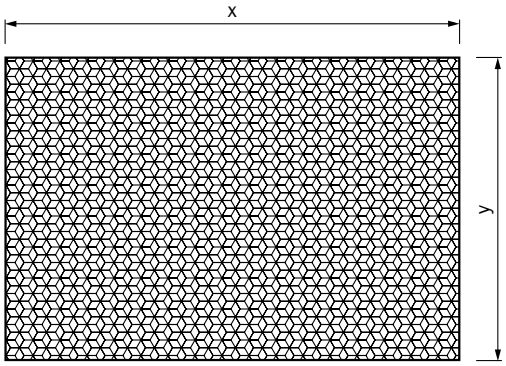

① X = 50 mm
② Y = 60 mm

REF-PLUS-R50

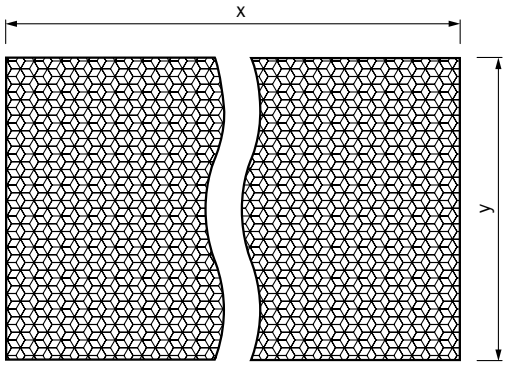

① X = 50 mm
② Y = 22.8 m

C110A

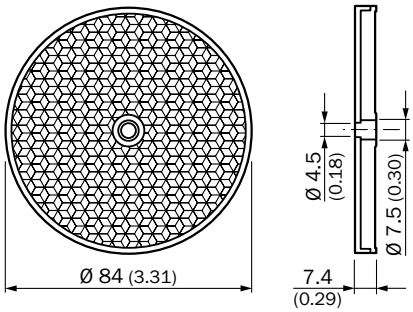

PL22-2

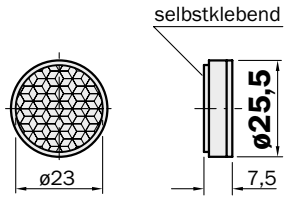

PLH25-D12

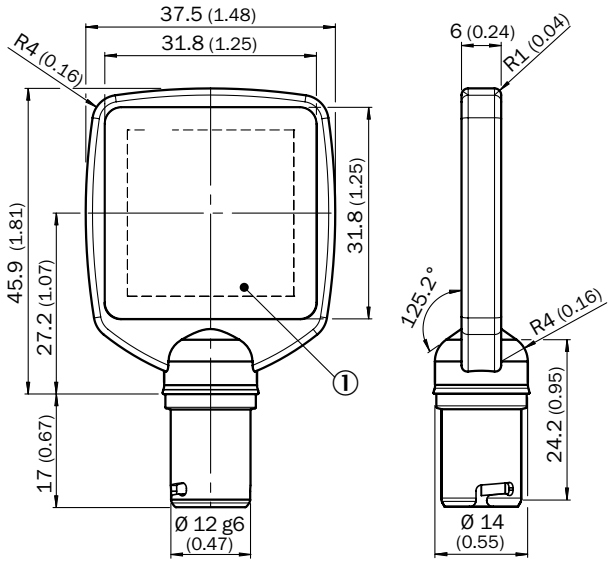

① Reflective area

PLH25-M12

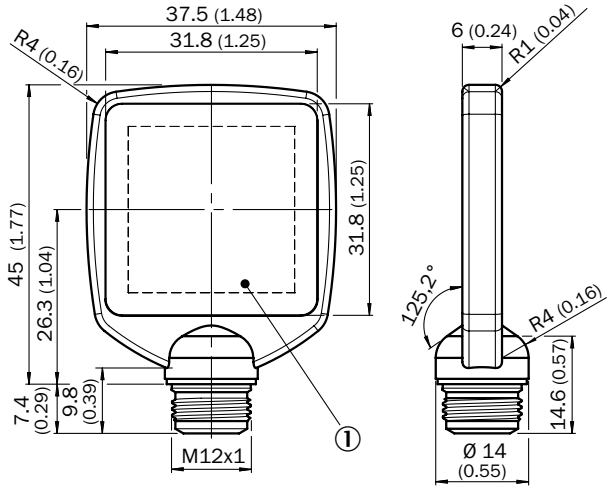

① Reflective area

PLV14-A

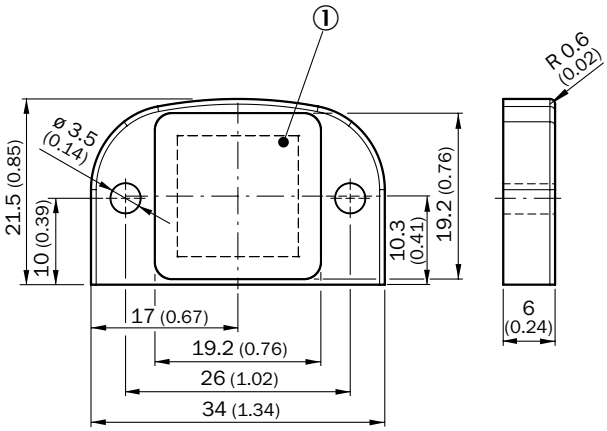

① Reflective area

REGISTER AT WWW.SICK.COM TODAY AND ENJOY ALL THE BENEFITS

- Select products, accessories, documentation and software quickly and easily.
- Create, save and share personalized wish lists.
- View the net price and date of delivery for every product.
- Requests for quotation, ordering and delivery tracking made easy.
- Overview of all quotations and orders.
- Direct ordering: submit even very complex orders in moments.
- View the status of quotations and orders at any time. Receive e-mail notifications of status changes.
- Easily repeat previous orders.
- Conveniently export quotations and orders to work with your systems.

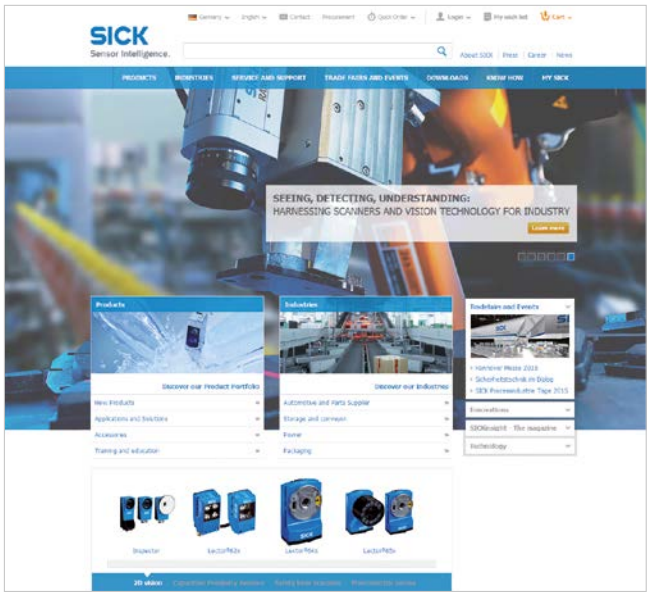

SERVICES FOR MACHINES AND SYSTEMS: SICK LifeTime Services

Our comprehensive and versatile LifeTime Services are the perfect addition to the comprehensive range of products from SICK. The services range from product-independent consulting to traditional product services.

Consulting and design
Safe and professional

Product and system support
Reliable, fast and on-site

Verification and optimization
Safe and regularly inspected

Upgrade and retrofits
Easy, safe and economical

Training and education
Practical, focused and professional

8018449/2016-08-26 · 1M · Pre USmod en46

SICK AT A GLANCE

SICK is a leading manufacturer of intelligent sensors and sensor solutions for industrial applications. With more than 7,400 employees and over 50 subsidiaries and equity investments as well as numerous agencies worldwide, we are always close to our customers. A unique range of products and services creates the perfect basis for controlling processes securely and efficiently, protecting individuals from accidents and preventing damage to the environment.

We have extensive experience in various industries and understand their processes and requirements. With intelligent sensors, we can deliver exactly what our customers need. In application centers in Europe, Asia and North America, system solutions are tested and optimized in accordance with customer specifications. All this makes us a reliable supplier and development partner.

Comprehensive services round out our offering: SICK LifeTime Services provide support throughout the machine life cycle and ensure safety and productivity.

For us, that is "Sensor Intelligence."

Worldwide presence:

Australia, Austria, Belgium, Brazil, Canada, Chile, China, Czech Republic, Denmark, Finland, France, Germany, Great Britain, Hungary, India, Israel, Italy, Japan, Malaysia, Mexico, Netherlands, New Zealand, Norway, Poland, Romania, Russia, Singapore, Slovakia, Slovenia, South Africa, South Korea, Spain, Sweden, Switzerland, Taiwan, Thailand, Turkey, United Arab Emirates, USA, Vietnam.

Detailed addresses and further locations → www.sick.com

SICK
Sensor Intelligence.