OPERATING INSTRUCTIONS

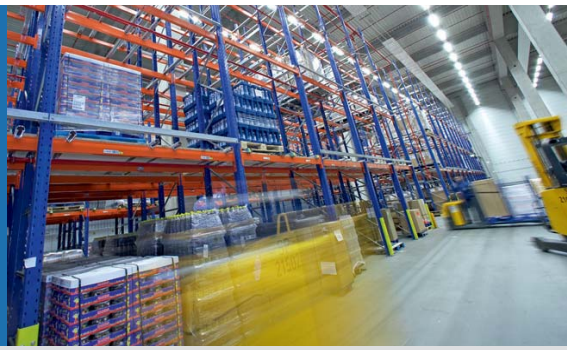

NAV350
Laser Positioning Sensor

Navigating the Route to improved productivity

SICK
Sensor Intelligence.

Software version described

Software/tool	Function	Status
NAV350	Firmware	V 1.06
Device description NAV350	Device specific software module for SOPAS ET	V 1.000 or higher
SOPAS ET	Configuration software	V 02.38 or higher

Software access to the NAV350 is password protected. The default factory setting for the password is as follows:

User level	Password
Authorised client	client

NOTICE

The NAV350 laser positioning sensor is intended for use in industrial environments. When used in residential areas, it can cause radio interferences.

Copyright

Copyright © 2016
SICK AG Waldkirch
Auto Ident, Reute Plant
Nimburger Straße 11
79276 Reute
Germany

Trademarks

Windows 2000™, Windows XP™, Windows Vista™ and Windows 7™ are registered trademarks of Microsoft Corporation in the USA and other countries.

Adobe® Reader™ is a trademark of Adobe Systems Incorporated.

Version of the operating instructions

The latest version of these operating instructions can be obtained as PDF at **www.sick.com**.

© SICK AG · Germany · All rights reserved · Subject to change without notice

Table of content

© SICK AG · Germany · All rights reserved · Subject to change without notice

© SICK AG · Germany · All rights reserved · Subject to change without notice

Abbreviations

CoLa Communication Language = proprietary SOPAS ET communication language (ASCII = CoLa-A or binary = CoLa-B)

EEPROM Electrically Erasable Programmable Read-only Memory

AGV Automated guided vehicle

LED Light Emitting Diode

RAM Random Access Memory = volatile memory with direct access

ROM Read-only Memory (permanent)

SOPAS ET SICK OPEN PORTAL for APPLICATION and SYSTEMS ENGINEERING TOOL = configuration software for the configuration of the NAV350

© SICK AG · Germany · All rights reserved · Subject to change without notice

Tables

© SICK AG · Germany · All rights reserved · Subject to change without notice

Figures

 © SICK AG · Germany · All rights reserved · Subject to change without notice

1 About this document

Please read this chapter carefully before working with this documentation and the laser positioning sensor NAV350.

1.1 Function of this document

These operating instructions are designed **to address the technical personnel** in regards to safe mounting, electrical installation, configuration, commissioning and maintenance of the following laser positioning sensor.

1.2 Target group

The intended target group for this document is people in the following positions:

Activities	Target group
Mounting, electrical installation, maintenance and replacement	Factory electricians and service engineers
Commissioning, operation and configuration	Technicians and engineers

Tab. 1: Target groups of this document

1.3 Depth of information

These operating instructions contain the following information on the NAV350:

- Product description
- Mounting
- Electrical installation
- Commissioning and configuration
- maintenance
- troubleshooting and rectification
- Ordering information
- conformity and approval

Planning and using a laser positioning sensor such as the NAV350 also require specific technical skills which are not detailed in this documentation.

In addition, an online help is available in the SOPAS ET configuration software supplied; this help provides information on the usage of the software user interface, as well as on the configuration of the NAV350.

Further information on the NAV350 is available from SICK AG, Division Auto Ident, and in the Internet at www.sick.com.

Important In the following the laser positioning sensor is referred to as NAV350 for short.

© SICK AG · Germany · All rights reserved · Subject to change without notice

1.4 Symbology used

Recommendation Recommendations are designed to give you assistance in the decision-making process with respect to a certain function or a technical measure.

Important Sections marked “Important” provide information about special features of the device.

Explanation Explanations provide background knowledge on technical relationships.

MENU COMMAND This typeface indicates a term in the SOPAS ET user interface.

Terminal output This typeface indicates messages that the NAV350 outputs via its interfaces.

➢ **Take action ...** Here you must do something. This symbol indicates an instruction to perform an action that contains only one action or actions in warnings where a specific sequence does not need to be followed. Instructions to perform actions that contain several steps in a specific sequence are numbered.

This symbol refers to additionally available documentation.

Software notes show where you can make the appropriate settings and adjustments in the SOPAS ET configuration software.

NOTICE

Note!

A note provides indicates potential hazards that could involve damage or degradation of the functionality of the NAV350 or other devices.

⚠ WARNING

Warning!

A warning indicates an actual or potential hazard. They are designed to help you to prevent accidents.

The safety symbol beside the warning indicates the nature of the risk of accident, e.g. due to electricity. The warning category (DANGER, WARNING, CAUTION) indicates the severity of the hazard.

➢ Read carefully and follow the warning notices!

© SICK AG · Germany · All rights reserved · Subject to change without notice

2 For your safety

This chapter deals with your own safety and the safety of the equipment operators.

➢ Please read this chapter carefully before working with the NAV350.

2.1 Authorised personnel

The NAV350 must only be installed, commissioned and serviced by adequately qualified personnel.

NOTICE

Repairs to the NAV350 are only allowed to be undertaken by trained and authorised service personnel from SICK AG.

The following qualifications are necessary for the various tasks:

Activities	Qualification
Mounting and maintenance	• Basic technical training • Knowledge of the current safety regulations in the workplace
Electrical installation and replacement	• Practical electrical training • Knowledge of current electrical safety regulations • Knowledge on the use and operation of devices in the related application (e.g. crane, assembly system)
Commissioning, operation and configuration	• Knowledge on the use and operation of devices in the related application (e.g. crane, assembly system) • Knowledge on the software and hardware environment in the related application (e.g. crane, assembly system) • Basic knowledge of the Windows operating system • Basic knowledge of data transmission

Tab. 2: Authorised personnel

© SICK AG · Germany · All rights reserved · Subject to change without notice

2.2 Correct use

NOTICE

The NAV350 laser positioning sensor is intended for use in industrial environments. When used in residential areas, it can cause radio interferences.

The NAV350 is used to determine the position of automated guide vehicles (AGV) at a point on the programmed route. Fitted to an AGV, the NAV350 continuously measures the positions of reflectors detected as well as the surrounding contour. Depending on the operating mode selected, the NAV350 outputs to the AGV's vehicle computer the position of the reflectors, or its own position, as well as the distance, the angle and the remission of the surrounding contour seen. The vehicle computer can use this information to correct the course of the AGV as necessary to keep it to the route.

The NAV350 is a sensor for use indoors.

Important In case of any other usage as well as in case of modifications to the NAV350, e.g. due to opening the housing during mounting and electrical installation, or to the SICK software, any claims against SICK AG under the warranty will be rendered void.

NOTICE

The NAV350 is only allowed to be operated in the ambient temperature range allowed (see *section 9.1 "Data sheet NAV350" on page 63*).

© SICK AG · Germany · All rights reserved · Subject to change without notice

2.3 General safety notes and protective measures

WARNING

Safety notes

Please observe the following items in order to ensure the correct and safe use of the NAV350.

- The notices in these operating instructions (e.g. on use, mounting, installation or integration into the existing machine controller) must be observed.
- When operating the NAV350, the national, local and statutory rules and regulations must be observed.
- National/international rules and regulations apply to the installation, commissioning, use and periodic technical inspections of the NAV350, in particular
  - the work safety regulations/safety rules
  - other relevant health and safety regulations.
- Manufacturers and operators of the machine/system on which the NAV350 is installed are responsible for obtaining and observing all applicable safety regulations and rules.
- The tests must be carried out by specialist personnel or specially qualified and authorised personnel and must be recorded and documented to ensure that the tests can be reconstructed and retraced at any time.
- The operating instructions must be made available to the operator of the system where the NAV350 is used. The operator of the system is to be instructed in the use of the device by specialist personnel and must be instructed to read the operating instructions.
- The NAV350 is not a device for the protection of people in the context of the related safety standards for machinery.

2.3.1 Electrical installation work

NOTICE

- Only authorised personnel are allowed to perform the electrical installation work.
- Only make and disconnect electrical connections when the device is electrically isolated.
- Select and implement wire cross-sections and their correct fuse protection as per the applicable standards.

➢ Do not open the housing.

➢ Observe the current safety regulations when working on electrical systems.

© SICK AG · Germany · All rights reserved · Subject to change without notice

2.3.2 Laser radiation of the NAV350

⚠ CAUTION

Laser radiation!

The NAV350 is corresponds to laser class 1 (eye-safe) according to EN 60825-1:2014+A11:2021, IEC 60825-1:2014, EN/IEC 60825-1:2007. Complies with 21 CFR 1040.10 and 1040.11 except for deviations pursuant to Laser Notice No. 50. The laser beam is not visible to the human eye.

- Improper use can lead to hazardous radiation exposure.
- ➢ Do not open the housing (opening the housing does not prevent the laser from switching on).
- ➢ Pay attention to the laser safety regulations as per IEC 60825-1 (valid version).

Important No maintenance is necessary to ensure compliance with laser class 1.

Laser output aperture

The laser output aperture is the view window on the scanner head of the NAV350.

Fig. 1: Laser output aperture on the NAV350

Laser power

The laser operates at the wavelength λ = 905 nm (invisible infrared light). The radiation emitted in correct use is not harmful to the eyes and human skin.

2.4 Quick stop and Quick restart

2.4.1 Switch the NAV350 off

➢ Switch off the voltage supply (power supply) for the NAV350.

The NAV350 retains parameters stored in the internal, non-volatile memory. Measured values in the memory are lost.

2.4.2 Switch on the NAV350

➢ Switch on voltage supply (power supply) for the NAV350.

The NAV350 restarts operation with the last saved parameters.

© SICK AG · Germany · All rights reserved · Subject to change without notice

2.5 Environmental protection

The NAV350 has been designed to minimise environmental impact. It uses only a minimum of power.

While working, always act in an environmentally responsible manner. For this reason please note the following information on disposal.

2.5.1 Power consumption

- The NAV350 consumes a maximum of 36 W in operation.

2.5.2 Disposal after final de-commissioning

➢ Always dispose of unserviceable or irreparable devices in compliance with local/national rules and regulations on waste disposal.

➢ Dispose of all electronic assemblies as hazardous waste. The electronic assemblies are straightforward to dismantle.

Important SICK AG does not accept unusable or irreparable devices that are returned.

© SICK AG · Germany · All rights reserved · Subject to change without notice

3 Product description

This chapter provides information on the special features and properties of the NAV350. It describes the construction and the operating principle of the device, in particular the different operating modes.

Please read this chapter before mounting, installing and commissioning the device.

3.1 Delivery

The NAV350 delivery includes the following components:

Quantity	Component	Comment
1	NAV350 Laser positioning sensor	–
1	Device instructions with electrical circuit diagram for getting started	Is included in the NAV350 packaging
1	Lens cloth	–

Tab. 3: Delivery

Source for obtaining additional information

Additional information about the NAV350 and its optional accessories can be found in the following places:

Product web page for the NAV350

(www.sick.com/NAV3xx)

- Detailed technical specifications (online data sheet)
- Technical information (supplementary information on telegrams for CoLa A/B, part no.: 8016855 and USP, part no.:8016687)
- These operating instructions are available in German, English and other languages if required.
- Dimensional drawing and 3D CAD dimension models in various electronic formats
- Declarations of conformity and certificates
- SOPAS configuration software updates

Support is also available from your sales partner: *www.sick.com/worldwide.*

 © SICK AG · Germany · All rights reserved · Subject to change without notice

3.2 Construction of the NAV350

3.2.1 Views of device

Fig. 2: Views of device

© SICK AG · Germany · All rights reserved · Subject to change without notice

3.2.2 Controls and status indicators

User interface

The NAV350 operates fully automatically in normal operation without the intervention of an operator.

The interactive configuration is carried out using the provided SOPAS ET configuration software. The software used for this purpose runs on a PC with the operating system Windows that is connected to the NAV350 via one of the interfaces.

Use the graphic scan view in SOPAS ET to verify the generated measured values and to verify the measurement area online. During this process, note that SOPAS ET cannot display the data in real-time and therefore does not display all measured values.

Status indicators

The LEDs signal the operational status of the NAV350.

The NAV350 has four LEDs. These visually signal the actual operational status and the sta-- tus of the continuous self-check. The LEDs are on the front of the device on the NAV350. *tab. 4* shows the function of the LEDs.

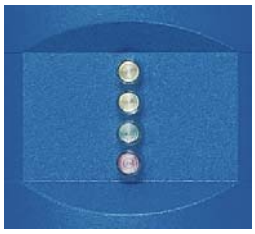

Yellow (1)
Yellow (2)
Green
Red

Yellow LED (1)	Yellow LED (2)	Green LED	Red LED	Meaning
Off	Off	Off	Off	Device switched off. No supply voltage.
On	On	On	On	LED test for 5 s after switching on. The output signal switching device is active.
Off	On	Any	Any	A command is being processed
Off	Any	Flashing 1 Hz	Any	Stand by
Off	Any	Flashing 4 Hz	Any	Measurement mode
Flash-ing 4 Hz	Off	Flashing 1 Hz	Off	Firmware Update
Any	Any	Any	On	System error in the device For information on troubleshooting see *section 8.3 "Troubleshooting and rectification" on page 61*

Tab. 4: Meaning of the LED status indicators

© SICK AG · Germany · All rights reserved · Subject to change without notice

3.3 Special features of the NAV350

Special features	Specific form
High performance	• Usage on route with max. 12,000 reflectors • Can be divided into up to 320 layers (as a result downward compatible with the NAV200) • Detection of reflector marks in a scan angle of 360° • Detection of reflector marks in the measuring range 0.5 m to 70 m (1.64 ft to 229.66 ft) • Position measurement accuracy ±4 mm (0.16 in) to ±25 mm (0.98 in) (dependent on the average reflector distance) • Contour measurement up to 35 m (114.83 ft) (for objects with a remission of 10%) • Angular accuracy ±0.1° • Mounting orientation with optical axis parallel to the surface driven over, overhead installation also possible
Safety and convenience	• Robust, compact metal housing (max. IP 65), CE marking • Laser class 1 • Maintenance-free
Configuration/ operation	• Configuration using SOPAS ET software for PC • Alternatively using telegrams (command strings) • Mapping (teach-in) of reflector positions
Result output	**Landmark detection** • Reflector measurement and output of the reflector position in the local co-ordinate system of the NAV350 • Output of distance and angle of a reflector • Optional: Output of distance, angle and remission value of the surround-ing contour seen **Navigation** • Continuous position determination • Output of the absolute position value of the NAV350 in a global co-ordi-nate system • Optional: Output of distance, angle and remission value of the surround-ing contour seen
Electrical interfaces	• Supply voltage DC 24 V • Data interfaces: Ethernet, RS-232 serial • 1 x output signal switching device for synchronisation

Tab. 5: Special features of the NAV350

© SICK AG · Germany · All rights reserved · Subject to change without notice

3.4 Applications

AGV line guidance based on contour and reflector measurements (mixed mode navigation):

- shuttle systems
- freely moving forklift
- truck loading
- general automated guided vehicles

3.5 Operating principle of the NAV350

The NAV350 has an opto-electronic laser measurement system that electro-sensitively scans the contour of its surroundings in a plane with the aid of laser beams. The NAV350 measures its surroundings in two-dimensional polar coordinates. If a measurement beam is incident on an object, the position is determined in the form of distance, direction and remission.

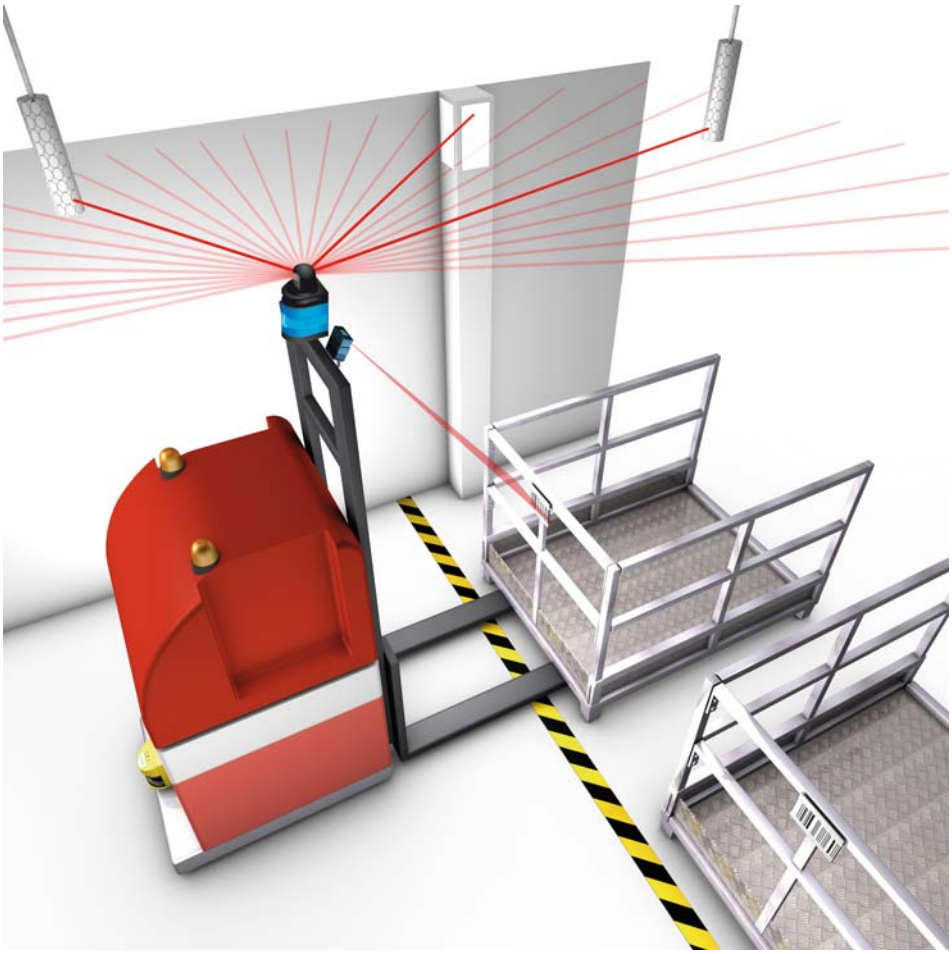

Fig. 3: Measuring principle of the NAV350

From the propagation time that the light requires from emission to reception of the reflec-- tion at the sensor the NAV350 calculates the distance to the object.

Scanning takes place in a sector of 360°. The scanner head rotates at a frequency of 8 Hz. During this process, a laser pulse and therefore a distance measurement is triggered after an angular step of 0.25°.

© SICK AG · Germany · All rights reserved · Subject to change without notice

3.5.1 Navigation and landmark detection operating modes

The NAV350 has integrated application software that is used for the continuous detection of reflectors. By means of the reflectors the absolute position of the NAV350 (*section 3.7 "Navigation" on page 24*), the relative position of the reflectors detected (*section 3.6 "Landmark detection" on page 23*) or a combination of both can be output to the vehicle computer connected.

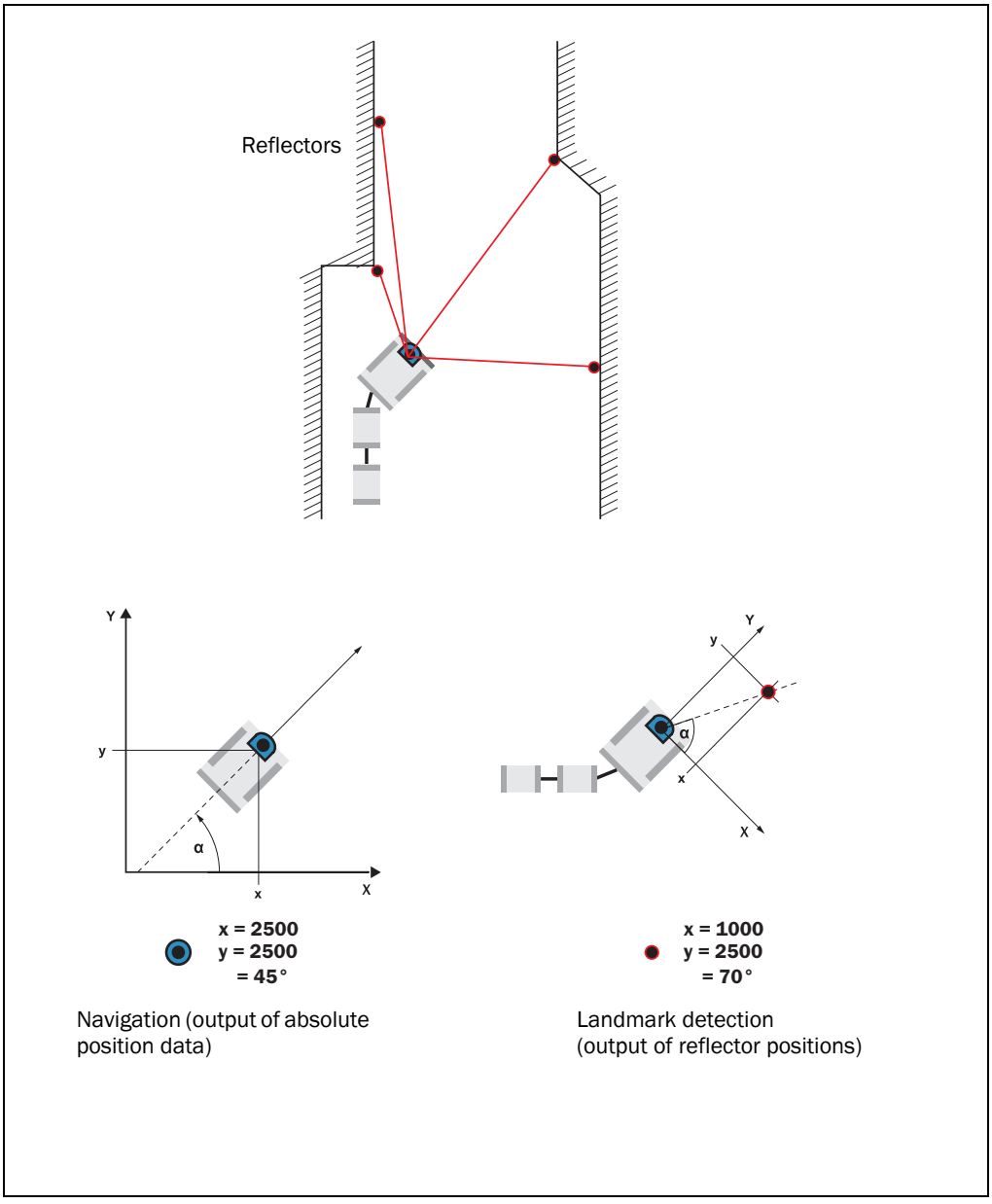

Fig. 4: Principle of operation of the NAV350

In addition to navigation and landmark detection, the NAV350 can output the surrounding contour measured to the vehicle computer connected (mixed mode).

© SICK AG · Germany · All rights reserved · Subject to change without notice

3.5.2 Influences of objects on the measurement

The majority of surfaces reflect the laser beam diffusely in all directions. The reflection of the laser beam will vary as a function of the surface structure and colour. Light surfaces reflect the laser beam better than dark surfaces and can be detected by the NAV350 over larger distances. Brilliant white plaster reflects approx. 100% of the incident light, black foam rubber approx. 2.4%. On very rough surfaces, part of the energy is lost due to shading. The scanning range of the NAV350 will be reduced as a result.

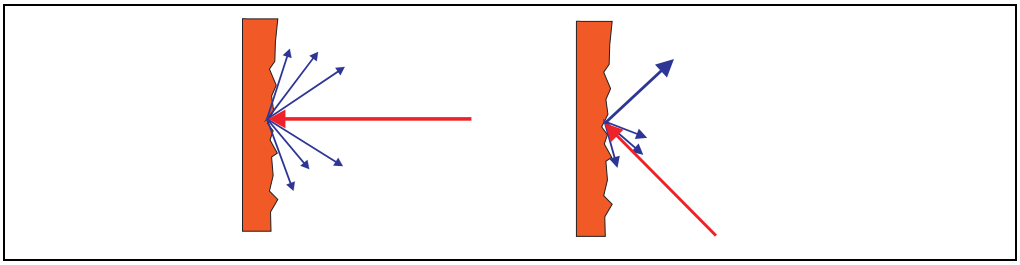

Fig. 5: Diffuse reflection from objects

The reflection angle is the same as the angle of incidence. If the laser beam is incident perpendicularly on a surface, the energy is optimally reflected (on the left). If the beam is incident at an angle, a corresponding energy and scanning range loss is incurred (on the right).

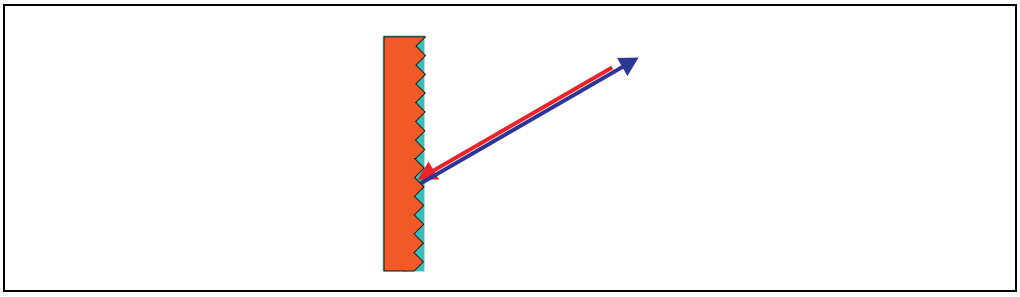

Fig. 6: Directional reflection from reflectors

The incident radiation is not reflected diffusely in all directions by reflectors, but directionally. As a result a large portion of the energy emitted can be received by the NAV350. The NAV350 makes use of this situation to be able to exactly measure the positions of reflectors.

Possible sources of errors

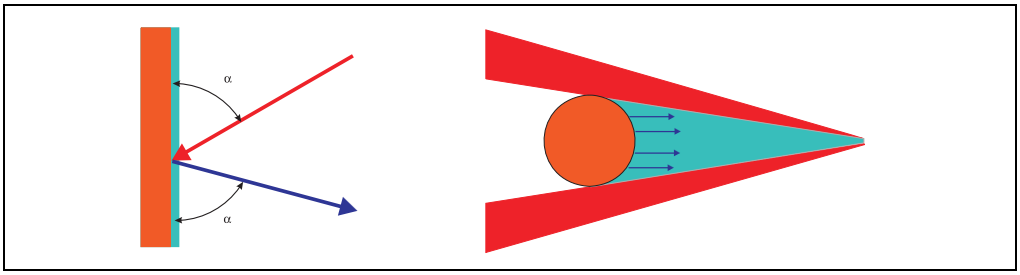

Fig. 7: Possible sources of errors during the measurement

At mirror surfaces (*fig. 7*, on the left) the laser beam is almost entirely deflected. Instead of the surface of the mirror, it is possible that the object on which the deflected laser beam is incident may be detected.

Objects that are smaller than the diameter of the laser beam (*fig. 7*, on the right) cannot reflect all the energy of the laser light. The energy in the portion of the laser light that is not reflected is lost. This means that the scanning range is less than would be possible theoretically based on the surface of the object.

© SICK AG · Germany · All rights reserved · Subject to change without notice

3.5.3 Scanning range of the NAV350

The scanning range of the NAV350 is dependent on the remission of the objects to be detected. The better a surface reflects the incident radiation, the greater the scanning range of the NAV350.

Material	Remission	Range
Black car paint, matt	5%	0.5 ... 24 m (1.64 ... 78.74 ft)
Black photographic cardboard, matt	10%	0.5 ... 35 m (1.64 ... 114.8 ft)
Grey concrete	18%	0.5 ... 45 m (1.64 ... 147.6 ft)
White cardboard	90%	0.5 ... 100 m (1.64 ... 328.1 ft)
White plaster	100%	0.5 ... 110 m (1.64 ... 360.9 ft)
Reflective tape	>300%	0.5 ... approx. 250 m (820.21 ft)

Tab. 6: Typical remissions and scanning ranges

3.5.4 Beam diameter and distance between measured points

With increasing distance from the NAV350 the laser beam increases in size. As a result the beam diameter on the surface of the object increases.

The distance-dependent beam diameter is the distance (mm (in)) × 0.005 rad + 20 mm (0,79 in).

With increasing distance from the NAV350 the spacing between the individual measured points also increases. The diagram in *fig. 8* shows the beam diameter and the distance between measured points as a function of the distance from the NAV350.

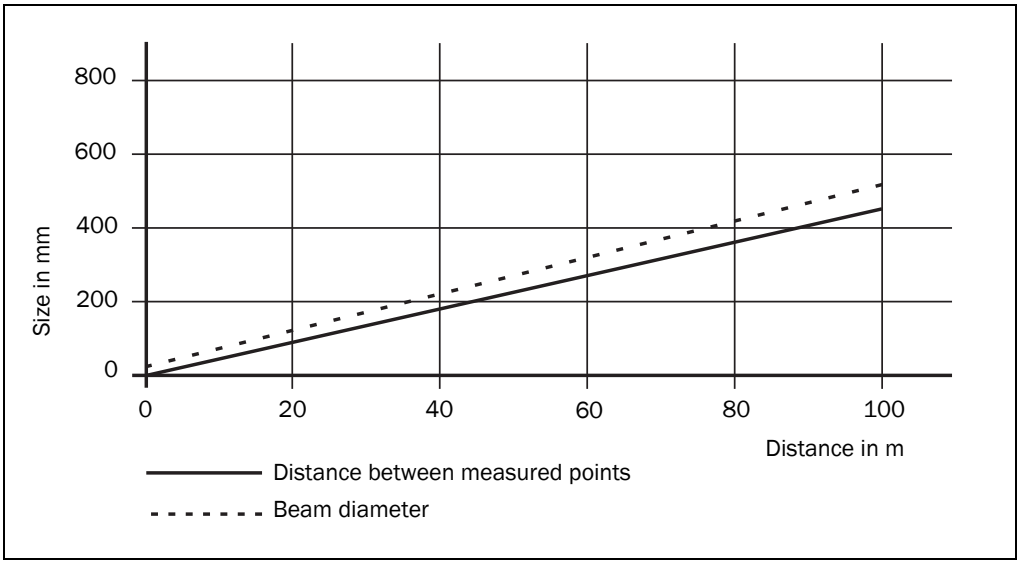

Fig. 8: Beam diameter and distance between measured points at 0 to 100 m

To reliably detect an object, a laser beam must be fully incident on it once. If the beam is partially incident, less energy will be reflected by an object than necessary in some circumstances (see *fig. 7 on page 21*).

How to calculate the minimum object size:

Beam diameter + distance between measured points = minimum object size

➢ For beam diameter and distance between measured points as a function of the distance from the NAV350 see the diagram in *fig. 8*.

© SICK AG · Germany · All rights reserved · Subject to change without notice

Important In particular on the usage of the NAV350 for the output of measured values, it is necessary for a reliable measurement that the beam is incident on the object several times.

3.6 Landmark detection

In the LANDMARK DETECTION operating mode the NAV350 generates an image of its current reflector environment in one revolution of the scanner head.

The 40 most dense reflectors from up to 250 measured reflectors are taken into account for positioning to limit the output size. These can be output by means of a telegram. The NAV350 calculates the exact position from the next four to eight reflectors in an asymmetric arrangement. (see *fig. 24 on page 40*) The reflectors are selected adaptively.

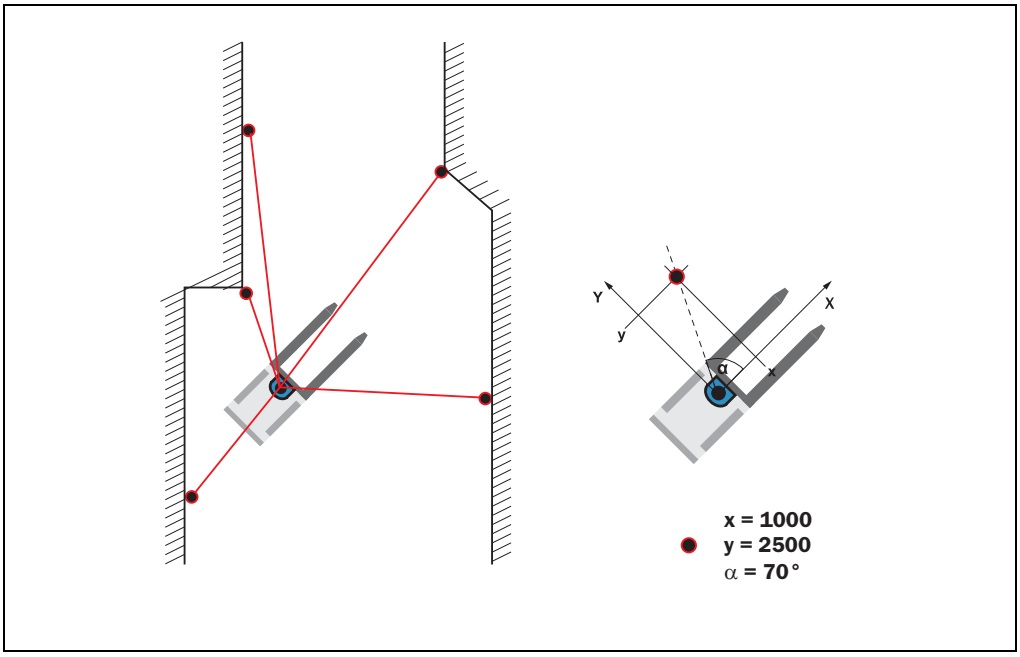

Fig. 9: Landmark detection

This mode enables the AGV's vehicle computer to directly access in real-time the landmark coordinates (reflectors) measured by the NAV350. The data from this direct access can be evaluated by the vehicle computer with the aid of specific algorithms to calculate the vehicle position. This may be performed using data from other sensors, e.g., encoders.

© SICK AG · Germany · All rights reserved · Subject to change without notice

3.7 Navigation

In the NAVIGATION operating mode the NAV350 determines its own current position on the route during the movement of the AGV. This action is performed based on reflectors positioned in fixed locations in the surroundings. The detection of three reflectors is sufficient to determine the position.

Fig. 10: Determination of the position by the NAV350 by means of the detection of reflector placements

For position output ...

- an absolute coordinate system with an origin must be defined (as a rule in a corner of a building, see *section 3.10.4 "Absolute coordinate system" on page 38*).
- reflectors must be fitted along the route (see *section 3.10.6 "Reflector placements" on page 40*). These reflector are either measured and their coordinates saved in the NAV350 or they are taught-in by the NAV350 (mapping).

The NAV350 passes the position data to the AGV's vehicle computer on request. The vehicle computer steers the AGV along the programmed and therefore pre-defined route and corrects any course deviations that occur with the aid of the NAV350.

3.7.1 Operating principle of the NAV350 during determining position

During position determination, the NAV350 has three operational statuses:

- initial positioning
- continuous positioning
- Virtual positioning

 © SICK AG · Germany · All rights reserved · Subject to change without notice

Initial positioning

After the transition from another operating mode (e.g. stand-by) to the NAVIGATION operating mode, the NAV350 calculates and identifies the reflector positions by making a pattern comparison between the measured reflectors and the saved reflector positions in the current layer. Requirements for successful **initial positioning** are:

- The vehicle is not moving.
- There are at least three reflectors in the field of view of the NAV350.

Depending on the number of measured reflectors and number of reflectors in the current layer, **initial positioning** can take several seconds.

If the last position is still known, using the software telegram sMN MNPOSSETPOSE the vehicle computer can directly activate continuous positioning from a defined position and in this way restore the contact to the layer.

Continuous positioning

After successful **initial positioning** the NAV350 automatically changes to the **continuous positioning** operational status. Here the computationally intensive pattern comparison of the **initial positioning** is not required. The NAV350can supply new position data with a repetition rate of approx. 8 Hz.

During **continuous positioning** the NAV350 has an expectation as to the approximate position of the reflectors (see *fig. 11*). For this purpose the NAV350 places a detection window with a configurable radius r (factory setting 300 mm (11.81 in)) around each reflector coordinate.

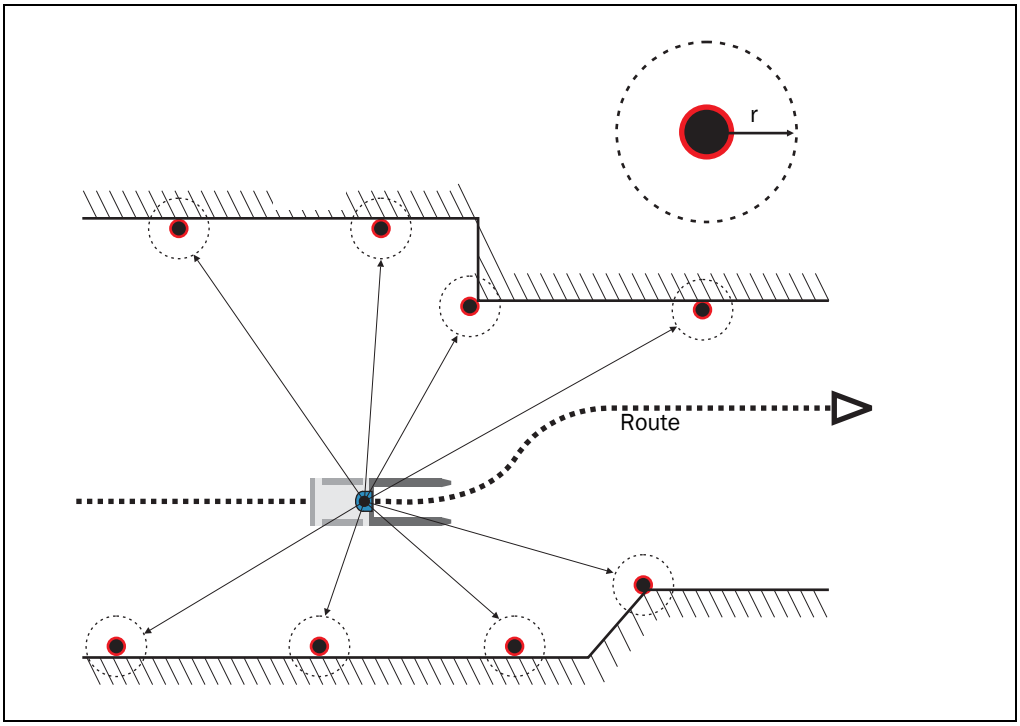

Fig. 11: Identification of reflectors in the operational status “continuous positioning”

Reflectors are measured within the identification window. The relevant reflectors are used to calculate the position by means of the adaptive selection. By configuring larger detection windows, the NAV350 can be optimised for instance for very dynamic AGV velocity changes, by reducing the size of the windows for extreme conditions due to misreflections.

© SICK AG · Germany · All rights reserved · Subject to change without notice

The radius of the detection window can also be configured as a function of the distance between the NAV350 and the reflector. For this purpose the start and end point of a linear function and the size of the detection window at the start and end point are transferred to the NAV350.

The minimum start point for the linear function at $dist_{Low}$ can be at 0.5 m (1.64 ft), the maximum end point at $dist_{High}$ can be at 70 m (229.66 ft). The radius of the detection window can be set in the range from 100 ... 2,000 mm (3.94 ... 78.74 in).

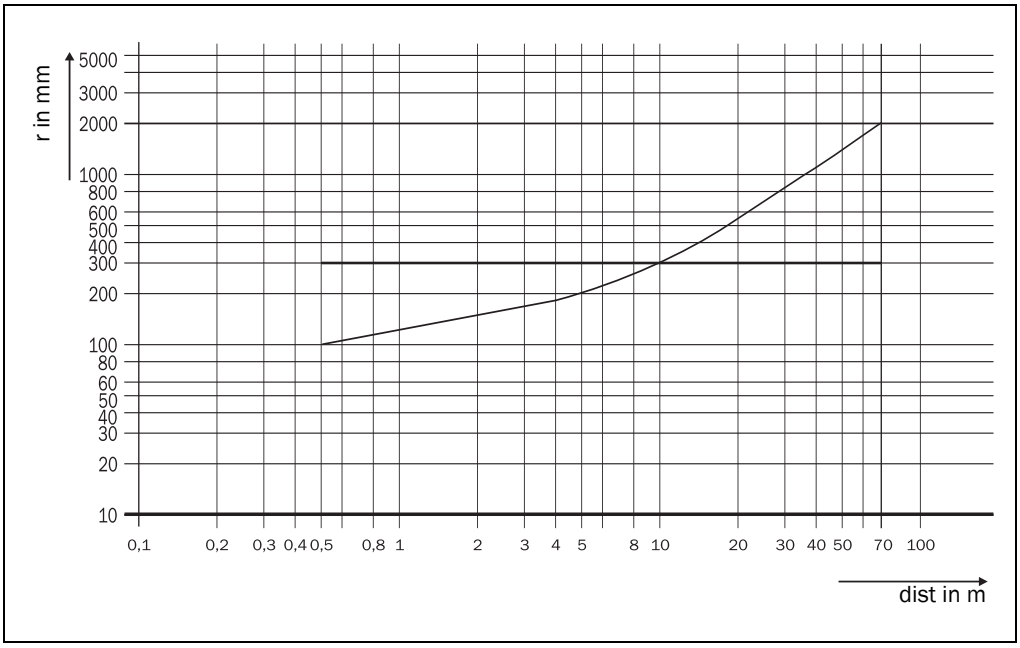

Fig. 12: Radius of the detection window as a function of the distance

If position is lost due to disruptive factors (e.g. simultaneous coverage of several reflectors), the NAV350 initiates an initial positioning. If the last position is still known, using the software telegram **sMN mNPOSSetPose** the vehicle computer can directly activate continuous positioning from a defined position and in this way restore the contact to the layer.

Virtual positioning

If the initial positioning fails, a position is estimated based on the entered speed and motion model for max. 3 m. After 3 m, the virtual position estimate is stopped.

© SICK AG · Germany · All rights reserved · Subject to change without notice

Measurement quality as indicator for the reliability of the position data

Together with the position data, the NAV350 provides the measurement quality to the vehicle computer. The measurement quality evaluates the deviation between the saved reflector positions and the detected reflector positions. It is a relative measure for the reliability of the position data. The measurement quality is output in millimetres as the standard deviations of all measured values for the reflectors detected per scan.

Errors in the measurement are output via the optional position data.

For further information on quality see document “NAV350 Telegram listing”, part- no.: 8013893.

If large deviations occur between saved and detected reflector positions, it is recommended to check the reflector placement and the velocity information, as well as to limit the acceleration of the AGV if possible.

The measurement quality has an effect on the control loop in the vehicle computer. Using this information, the system integrator can determine to what extent the position data from the odometry need to be corrected by the position data from the NAV350. The influence of the position data from the NAV350 on the correction is application-specific and depends on the quality of the odometry and the positioning tolerances allowed in the system.

3.7.2 Measuring accuracy

Positions in a restricted action radius of the NAV350 are measured more accurately and improve the positioning accuracy (see *section 9.1 “Data sheet NAV350” on page 63*).

Recommendation

Mount the reflectors at docking stations (e.g. pallet transfer point) and on bends within the defined, restricted action radius of the NAV350 or in relation to the route.

From the reflectors measured the NAV350 selects the 4 to 8 best distributed reflectors and uses these reflectors to determine the position.

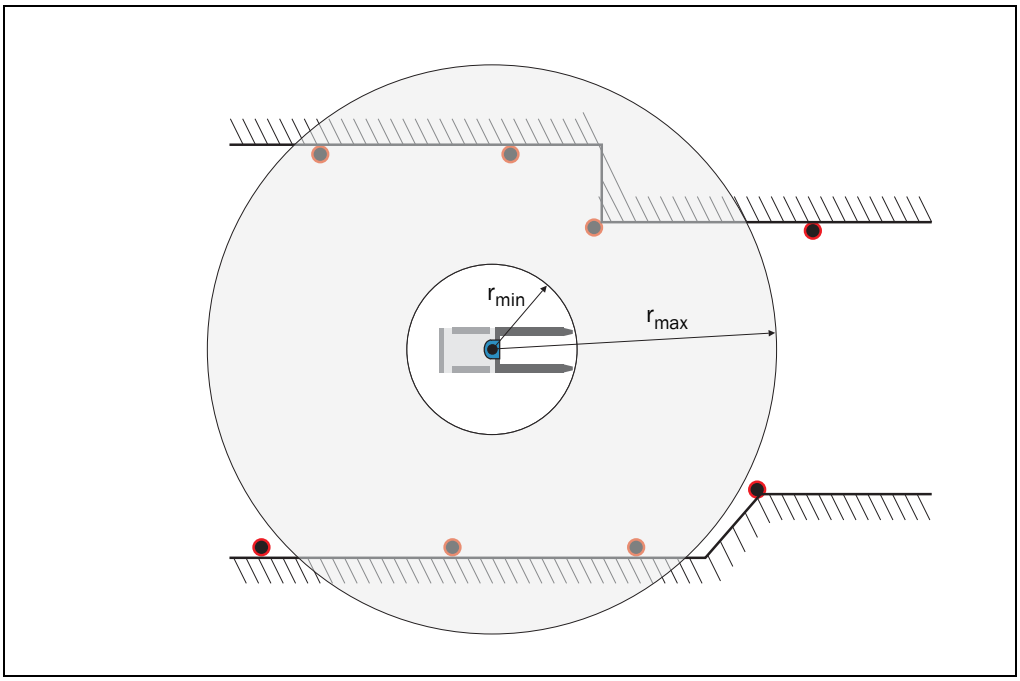

Fig. 13: Restricted action radius

© SICK AG · Germany · All rights reserved · Subject to change without notice

Reduction of the action radius

The parameters for the minimum and maximum radius are set using a software telegram from the vehicle computer. During this process it must be ensured that from every position of the NAV350 at least 3 reflectors are visible within the restricted action radius. If, e.g., there are only 2 reflectors within the restricted action radius, the NAV350 switches automatically to the full action radius.

The example in *fig. 13* shows a defined, restricted action radius with the parameters r_{min} = 500 mm (19.69 in) and r_{max} = 15,000 mm (590.55 in) in which the NAV350 is detecting five reflectors.

Sector muting

In certain applications it can be desirable to mute certain angular segments (sectors) within the 360° scan range of the NAV350, e.g. if individual reflectors are partially obscured by a raised load and therefore it is not possible to exactly determine the middle of the reflectors. This situation can result in reduced accuracy during the position determination.

The NAV350 does not use any measurements from reflectors that are in completely or partially muted sectors for the position determination.

The muted sectors are set in the NAVIGATION operating mode. The sector muting is then active for the following position request. However, the setting cannot be saved.

Important The reflector layout is to be designed such that for the NAV350 at least three reflectors are always visible in the sectors that are not muted.
If this is not the case, the NAV350 determines the position using all visible reflectors (similar to the measuring accuracy, see *section 3.7.2 “Measuring accuracy” on page 27*) and outputs this condition in the DIAGNOSTICS INFORMATION part of the telegram in the reply to the next position request (see “NAV350 Telegram listing”, part- no.: 8013893).

The limits for the muted sectors are stated as mathematically positively angles in mdeg. Up to 4 sectors are possible. The sectors are not allowed to overlap and the starting angle must be defined in ascending order that starts with a value ≥0.

© SICK AG · Germany · All rights reserved · Subject to change without notice

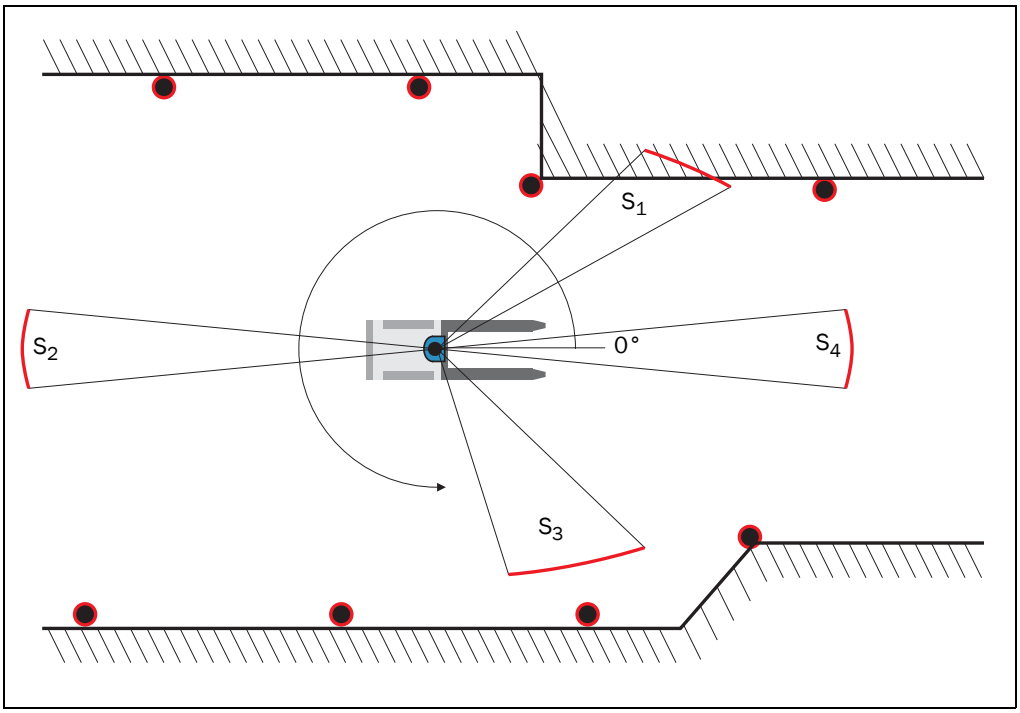

Fig. 14: Example for the definition of muted sectors

3.7.3 How the NAV350 deals with sources of error

Overlapping reflectors

On driving around corners or in aisles, two reflectors positioned one after the other will time and again partially or completely overlap from the point of view of the NAV350. The positions of these reflectors can then no longer be unambiguously defined and will make the position calculation by the NAV350 incorrect. The NAV350 detects such a situation and automatically mutes the usage of the overlapping reflectors.

The situation of an overlapping reflector occurs if the angle between two reflectors from the point of view of the NAV350 is less than 0.6°. The reflector placement is to be selected for this case such there are at least 3 further reflectors in the field of view of the NAV350.

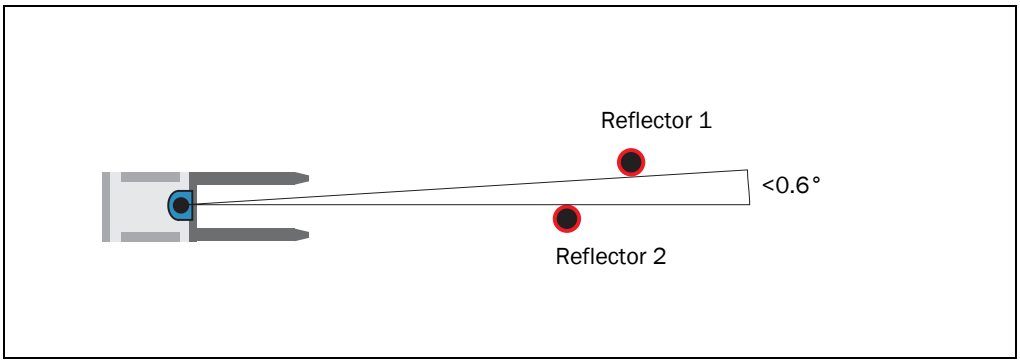

Fig. 15: Overlapping of two reflectors

© SICK AG · Germany · All rights reserved · Subject to change without notice

Misreflections

Misreflections can be produced by highly reflective objects. Highly reflective objects are, for example: windows, stainless steel trim panels or metal pipes. The misreflections are produced if the measurement beam from the NAV350 is incident perpendicularly on these objects.

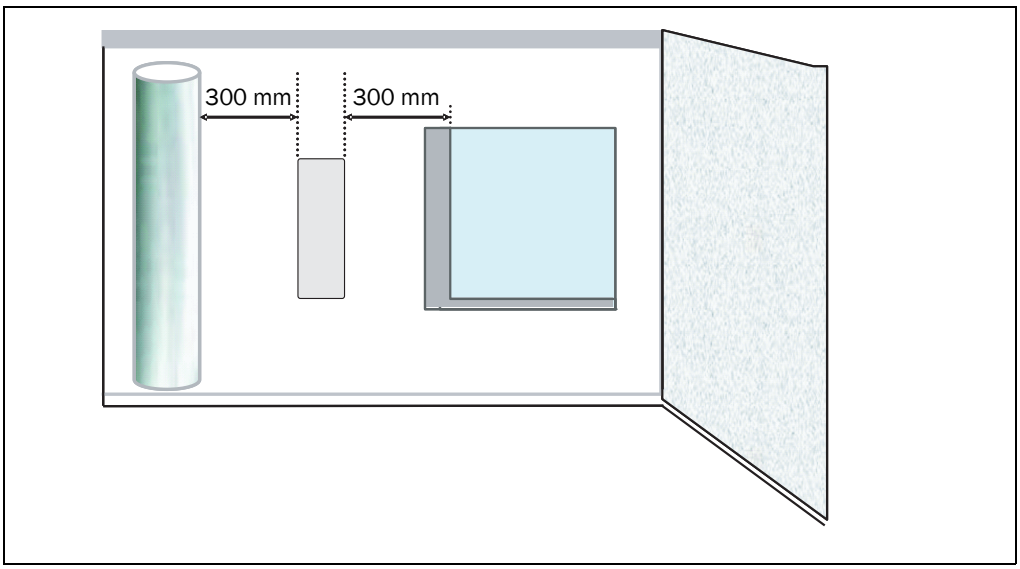

Fig. 16: Minimum distance from reflectors to other reflecting objects

So that these misreflections are not interpreted as reflectors, it is to be ensured the reflectors fitted are always at least 300 mm (11,81 in) from these objects. If the minimum distance cannot be maintained for specific objects, these objects are to be covered using a material with low reflection properties.

Subsequent movement of reflectors

Movement of reflectors that are also still in the measurement area of the NAV350 after they have been moved, will make the result of the measurement incorrect and must be corrected.
For correction the reflector must be returned to its original position or the coordinates of the new reflector position must be measured using the MAPPING function and transferred to the NAV350 using SOPAS ET.

Subsequent removal or obscuring of reflectors

If reflectors are obscured or removed, the NAV350 continues to determine its position based on the remaining reflectors without interruption, as long as at least three reflectors are visible from the position of the scanner head.

© SICK AG · Germany · All rights reserved · Subject to change without notice

3.8 Output of measured values

In addition to navigation and landmark detection, the NAV350 can output the measured surrounding contour to the host connected (mixed mode).

The measured values can be transmitted to a computer system connected and evaluated here (see *section 3.9.2 "Data communication using telegrams" on page 32*). The host can calculate the position of the AGV from these measured values.

Navigation based on the surrounding contour measured is useful in places in which it is not possible to attach any reflectors, for example in truck cargo bays.

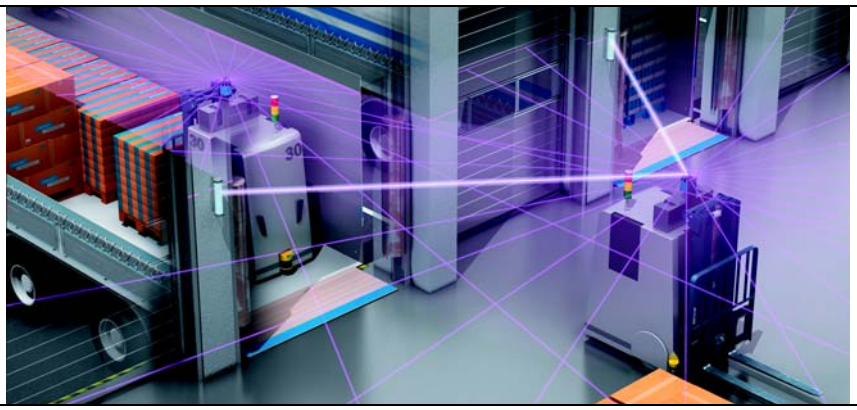

Fig. 17: Output of measured values for truck loading

The NAV350 outputs the following measured values at its data interfaces:

- profile of the field of view in two-dimensional polar coordinates
- contents of one revolution (360°): among other data, starting angle for the scan, step width, time stamp for start of the scan, number of measured values, value and direction of the measured distance, remission value of the object measured

Important It is only possible to output all measured values of a 360° scan in real-time using the Ethernet interface.

3.9 Integration of the NAV350 in an AGV's control system

Recommendation The integration of an NAV350 in an AGV's control system requires sound programming skills in the area of vehicle control. In addition knowledge of the data exchange between a laser positioning sensor such as the NAV350 and the vehicle computer are required. We therefore strongly recommend you make use of the training offered by SICK AG on the Hamburg site.

3.9.1 Data interfaces

The NAV350 has a serial host interface and an Ethernet interface. The NAV350 is configured with the aid of SOPAS ET via these interfaces. The NAV350 also communicates with the AGV's vehicle computer via its interfaces.

© SICK AG · Germany · All rights reserved · Subject to change without notice

3.9.2 Data communication using telegrams

The NAV350 sends telegrams over the interfaces described above to communicate with a connected vehicle computer. The following functions can be run using telegrams:

- setting parameters by the AGV's computer for the configuration of the NAV350
- querying parameters and status logs by the AGV's computer
- requesting landmark positions (if necessary incl. the contour measured values) by the AGV's computer, subsequent answer NAV350
- requesting positions (if necessary incl. the contour measured values) by the AGV's computer, subsequent answer NAV350

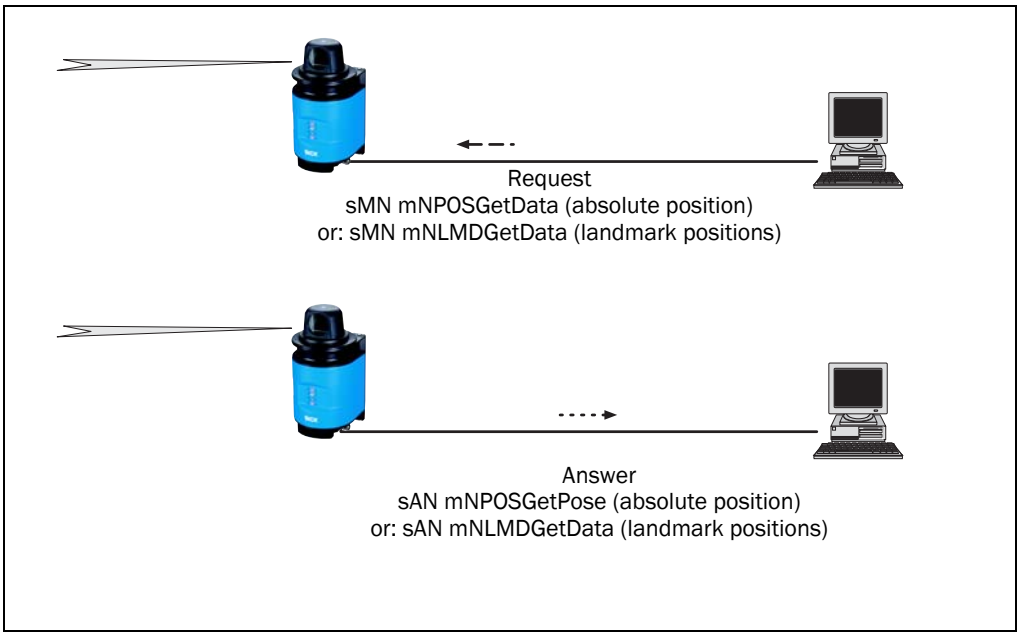

Fig. 18: Requesting an absolute position or landmark positions

Depending on the frequency of the data request from the vehicle computer, the NAV350 transfers data to the vehicle computer up to eight times per second.

The telegrams each comprise a frame (see *section "Frame and coding for the telegrams" on page 32*) and the data.

Frame and coding for the telegrams

	Frame	Telegram	Frame
Designation	STX	Data (see "NAV350 Telegram listing", part- no.: 8013893)	ETX
Length (byte)	1	≤35 kB	1
4Description	Start of text character	ASCII coded. The length is dependent on the previous send telegram.	End of text character

Tab. 7: Frame for the telegrams with ASCII coding

A detailed description of the different telegrams can be found in the "NAV350 Telegram listing", part- no.: 8013893.

© SICK AG · Germany · All rights reserved · Subject to change without notice

3.9.3 Relative position system and absolute position system

The AGV uses two position systems for vehicle control: a relative position system and an absolute position system.

The **relative position system** takes its data from the odometry (incremental encoder). The odometry supplies new data with a high refresh rate; the vehicle computer can calculate the position of the vehicle from these data. However, the relative position calculation includes errors. The error increases the greater the distance covered.

The **absolute position system NAV350** on the other hand supplies absolute position data on the route. Based on these absolute positions the AGV's vehicle computer can minimise the errors from the odometry.

fig. 19 shows schematically the integration of the NAV350 in a complete navigation system:

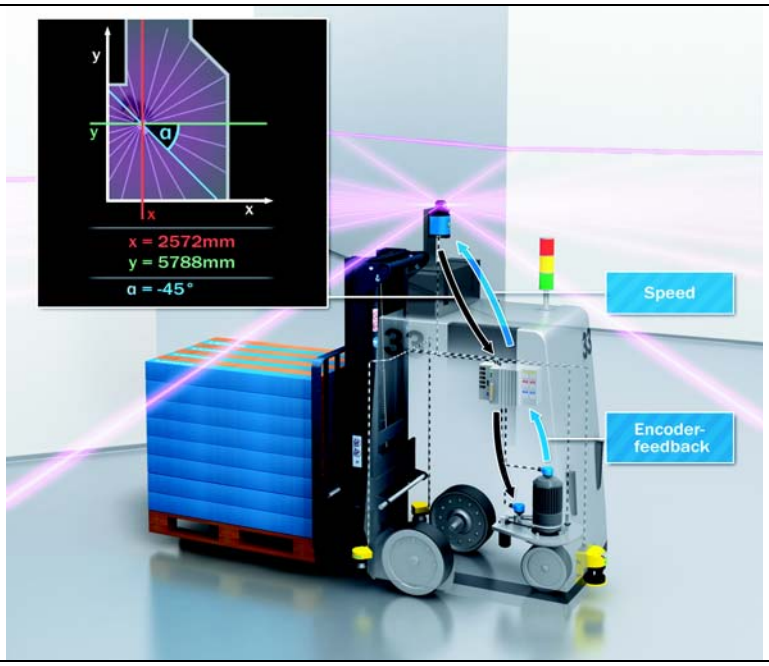

Fig. 19: Integration of the NAV350 in a navigation system

Overview of the integration of the NAV350 in the control system for an AGV

The vehicle computer informs the NAV350 of the actual velocity and rate of turn of the AGV from its odometry (see *fig. 18 on page 32*). To optimise the control, the vehicle computer transmits the velocity to the NAV350 several times between two position requests. The NAV350 uses the velocity data for three calculations:

- From the velocity data an expected position for reflectors in the next measuring cycle is calculated, in this way the measurement of the reflectors within one head revolution is corrected (see *fig. 11 on page 25*).
- Calculated position data are extrapolated to the time of the data transfer.
- By transferring the velocity several times between two position requests the NAV350 calculates a movement profile so as to take into account large AGV movement changes.

Important If no velocity data are transferred to the NAV350 by the vehicle's control system, the NAV350 calculates internally the velocity between two positions determined. This determination of the velocity can only be used at low accelaration and is only suitable for test purposes. For practical operation the velocity must be provided by the vehicle's control system.

The velocity and the rate of turn of the AGV must be transformed to the position of the NAV350 on the AGV.

© SICK AG · Germany · All rights reserved · Subject to change without notice

3.9.4 Digital output

The NAV350 has a digital output that is used for the synchronisation of the internal clock on the NAV350 and the vehicle computer's clock. The output supplies a 10 or 128 ms long pulse depending on the synchronisation method (see section *3.9.5 on page 34*). The pulse is output dependent on the synchronisation method.

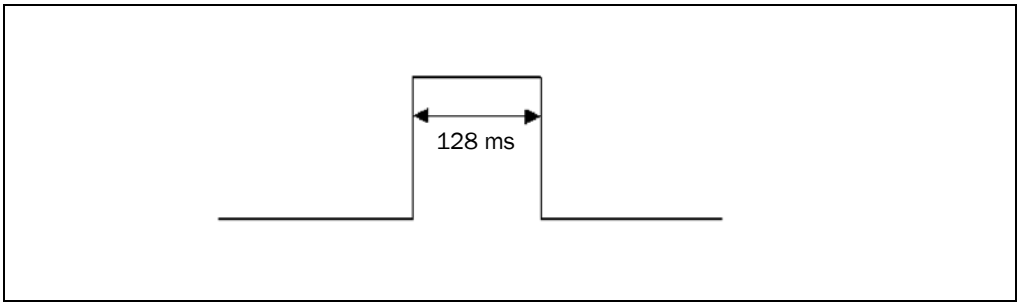

Fig. 20: Pulse for synchronisation

3.9.5 Synchronisation of the clock in the AGV and the clock in the NAV350

For precise control, it is necessary to synchronise as accurately as possible the navigation data and landmark data from the NAV350 and the calculations on the vehicle computer.

The internal time stamp in the NAV350 is added to the measured data from the NAV350. The internal time stamp in the NAV350 is a 32-bit counter that counts up by 1 every 1 ms.

To synchronise the internal time in the NAV350 with the system time in the vehicle's control system, the NAV350 provides three options.

1. via telegram
   The vehicle computer requests the internal time from the NAV350 using a telegram. The NAV350 writes its internal time in a telegram and sends it to the vehicle computer. However, there can be a delay of up to 3 ms on sending the data, as a result there is certain amount of inaccuracy.
2. via telegram and comparison with the digital output on the NAV350
   The vehicle computer request the internal time from the NAV350 using a telegram. The hardware output supplies a pulse of at least 10 ms in length as soon as the internal time stamp is written to the telegram. When the telegram is subsequently received by the vehicle computer, the vehicle computer can add to the time in this telegram the delta between the pulse and the reception. As a result the AGV can determine the actual time in the NAV350.
3. based on pulses on the hardware output
   The parameters for the hardware output are set using a telegram to generate, based on the 32-bit counter, an output pulse of 128 ms in length in a fixed cycle. The configuration is set using a bit pattern from bit 10 ... 20. Depending on the bit set, an output pulse is generated when this bit overflows in the counter.
   A configuration of e.g. 15 bit generates an output pulse every 32,768 ms.
   When the pulse arrives, the vehicle computer knows that in the NAV350 the 14 least significant bits of the counter are 0. Based on the time stamp in the telegram received subsequently, the vehicle computer can now determine the time that has elapsed since the telegram and add it to the time in the telegram.

Important Program the vehicle's control system such that it reacts to the rising edge of the output pulse

© SICK AG · Germany · All rights reserved · Subject to change without notice

3.9.6 Result Port

The NAV350 features a Result Port, a simplyfied telegramme with its own port. The Result Port supplies landmark data and scan data parallely to the CoLa dialect.

The Result Port can be configured via the SOPAS user interface. Alternatively, the Result Port may also configured using the CoLa diagrammes.

© SICK AG · Germany · All rights reserved · Subject to change without notice

3.10 Planning

3.10.1 System requirements of the NAV350

For commissioning and operating the NAV350, the following are required at the user:

- Supply voltage DC 24 V ±15 %, generated as per IEC 60364-4-41 (VDE 0100, part 410), output power minimum 40 W (see *section 5.3.1 "Supply voltage" on page 46*)
- Standard Intel Pentium PC or compatible, at least Pentium III, 500 MHz
  - RAM: minimum 256 MB, 512 MB recommended
  - operating system: MS Windows 2000, XP, VISTA or 7
  - monitor: minimum 256 colours, 65,536 colours recommended;
    Screen resolution at least 800 × 600
  - hard disc: minimum 220 MB free memory
  - data interface RS232 or Ethernet (see *section 5.3.3 "General conditions for the data interface" on page 47*), if necessary RS232 converter, if PC interface and interface on the NAV350 do not match

3.10.2 Mounting requirements

The NAV350 must be mounted stable.

For the NAV350 the mounting kit part no. 5311055 with mounting material is available.

As an alternative you can use a strong stable mounting bracket that provides adjustable alignment of the NAV350 in the X- and Y axis. The NAV350 weighs approx. 2.4 kg (5.29 lb).

© SICK AG · Germany · All rights reserved · Subject to change without notice

3.10.3 Distance between NAV350 and the object/surface to be measured

The measurement area on the NAV350 starts at 0.5 m (1.64 ft) in front of the optics (light output window).

To prevent false measurements, in the case of the recessed installation of the NAV350 the increase in the size of the laser beam with increasing distance is to be taken into account.

If mounted poorly, objects in the scan range may be continuously detected as the laser beam is always incident on them.

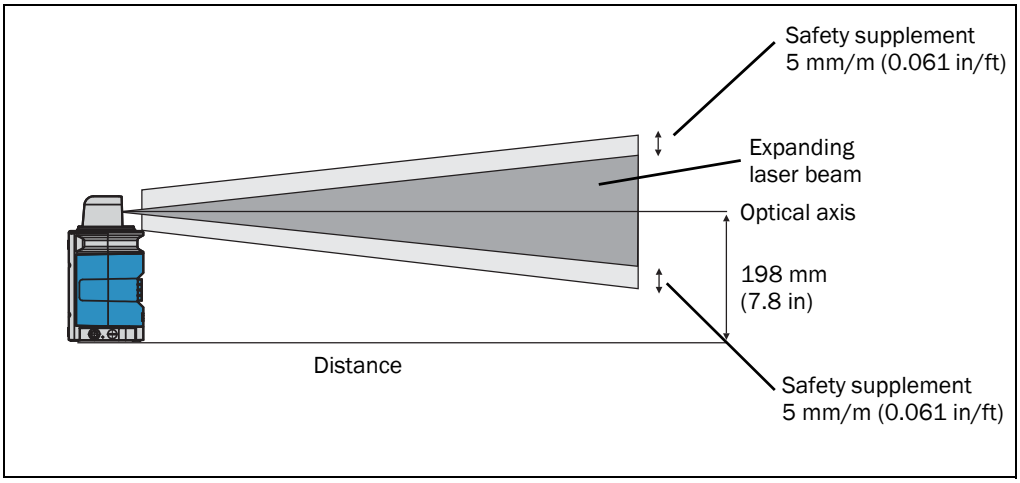

Fig. 21: Increase in the size of the beam and safety supplement

The optical axis is used as the reference plane for the distance to be maintained from the wall; on the vertically mounted NAV350 this axis is approx. 198 mm (7.8 in) above the bot-- tom edge of the housing.

The distance-dependent increase in the size of the beam can be calculated using the formula:

beam diameter = (distance (mm (in)) × 5.0 mrad) + 20 mm (0.79 in)[1)]

The following table shows a few values as examples:

Distance in m	5	10	15	20	25	30	40	50	60	70
Beam diameter [mm]	45	70	95	120	145	170	220	270	320	370

Tab. 8: Beam diameter at different distances from the NAV350

For the assessment of whether the laser beam can be incident on an object, the distance of half the beam diameter from the optical axis is used.

Important Use a safety supplement of 5 mm (0.2 in) per metre top and bottom (see *fig. 21 on page 37*).

Recommendation For the simplified calculation of the sum of the increase in the size of the beam and safety supplement, a value of 16 mm (0.63 in) per metre can be used.

1) Due to the transmit lens.

© SICK AG · Germany · All rights reserved · Subject to change without notice

3.10.4 Absolute coordinate system

During the planning of the reflector positions, a **common** coordinate system is defined on a floor plan. This **absolute coordinate system** corresponds to the coordinate system of the industrial machine/system. In this way the origin and axes for the absolute coordinate systems are defined.

In this coordinate system the NAV350 determines its absolute position in the X and Y direction including the angular position α of its **local coordinate system** in relation to the absolute coordinate system. The angular position here is the angle between the X axis of the sensor and the X axis of the absolute coordinate system. The angles are mathematically positive in the counterclockwise direction.

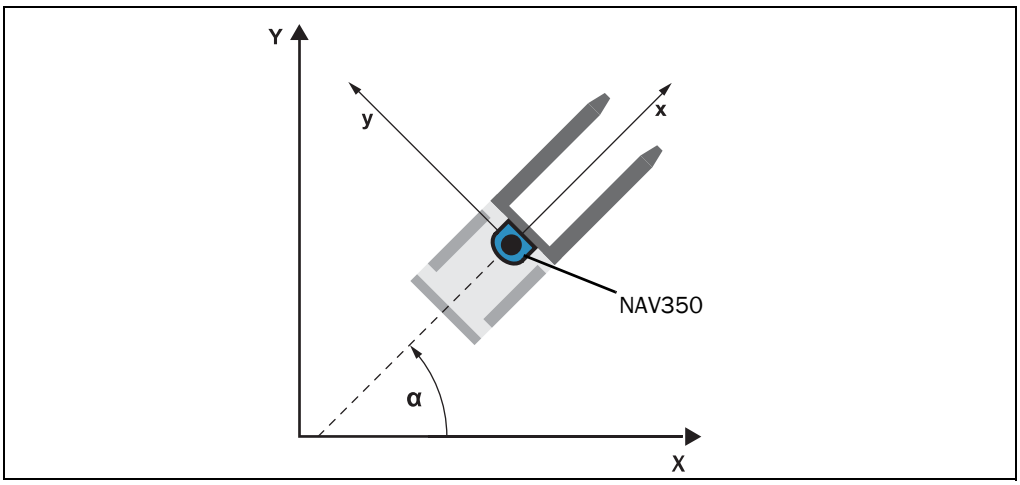

Fig. 22: Absolute and local coordinate system with angular position of the NAV350

X, Y = Absolute coordinate system of the machine/system

x, y = Local coordinate system of the NAV350

α = Direction of the NAV350 in the absolute coordinate system

The coordinate origin for the NAV350 is on the axis of the scanner head.

3.10.5 Reflectors

The NAV350 allocates the measured data determined from its surroundings to the reflector positions saved. For this purpose it must differentiate the reflectors from other reflecting objects. The NAV350 checks the measured data using characteristic data that are saved in its memory. These characteristic data apply to the reflective tape 983-10 (part no. 5320565) that is available as an accessory from SICK AG under the designation REF-DG.

Important Reflective tapes of other makes may not be correctly detected by the NAV350.

The reflector markers are designed as cylindrical reflectors. Cylindrical reflector markers can be detected from any angle.

© SICK AG · Germany · All rights reserved · Subject to change without notice

Reflector height

The vertical size and the vertical position of the reflectors are to be chosen such that the measurement beam is incident on the reflector even on an uneven floor. The maximum scanning range of the NAV350 is 70 m (229.66 ft) onto reflectors. It is possible to determine the minimum reflector heights based on the characteristics of the floor and the measurement distance. The measurement beam on the NAV350 increases in size by around 5 mm (0.63 in) per metre measurement distance (see *3.10.3 on page 37*). Tipping of the AGV due to unevenness on the floor must be taken into account as appropriate (incl. safety supplement). Recommended reflector heights are 500 mm (19.69 in) for a measurement distance up to 30 m (98.43 ft), 750 mm (29.53 in) for a measurement distance up to 46 m (150.92 ft) and 1000 mm (39.37 in) for a measurement distance up to 70 m (229.66 ft).

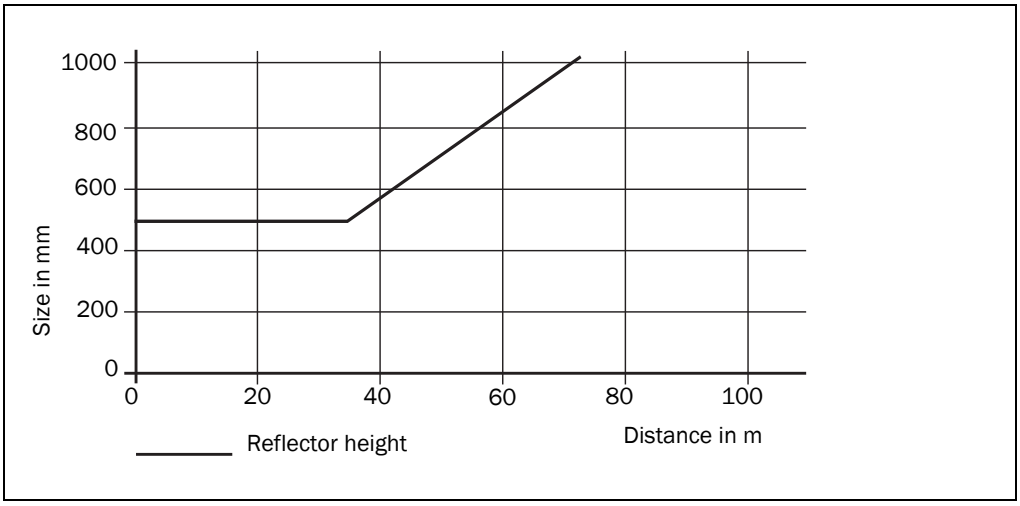

Fig. 23: Reflector height as a function of the distance from 0 to 70 m

Important The values stated in *fig. 23* apply without taking into account unevenness on the ground and tipping of the AGV by the load!

reflector diameter

The recommended diameter of cylindrical reflectors is 80 mm (3.15 in). If the diameters of the reflectors differ, it can lead to deviating measurement characteristics. Within a layer the diameter of cylindrical reflectors can vary. However, if it is intended to map the entire layer, only reflectors with the same diameter may be used.

Reference points for the reflectors

To unambiguously determine the coordinates of a reflector using the NAV350, the surface of the reflector must be reduced to a reference point:

In the case of cylindrical reflectors the reference point is at the intersection between the vertical axis of the cylinder and the scan plane, which in general is at half the height of the reflector.

© SICK AG · Germany · All rights reserved · Subject to change without notice

3.10.6 Reflector placements

Reflector placements are to be planned such that the NAV350 has a clear view of at least 3 reflectors in every position. A clear view of 4 to 5 reflectors is recommended to ensure reliable positioning even in the case of the operation of several AGV. As far as possible the same number of reflectors should be fitted to both sides of the route.

The NAV350 identifies a reflector placement by allocating individual reflector position measurements to the reflector coordinates saved. Specific requirements must be taken into account for the reflector placement for the **initial positioning**. So that the NAV350 can clearly unambiguously identify a reflector placement during the **initial positioning** (see *"Initial positioning" on page 25*), it needs a certain pattern in the placement. In such pattern, all the distances between the reflectors vary by at least 500 mm (19.69 in).

fig. 24 shows two examples for a correct and an incorrect reflector placement.

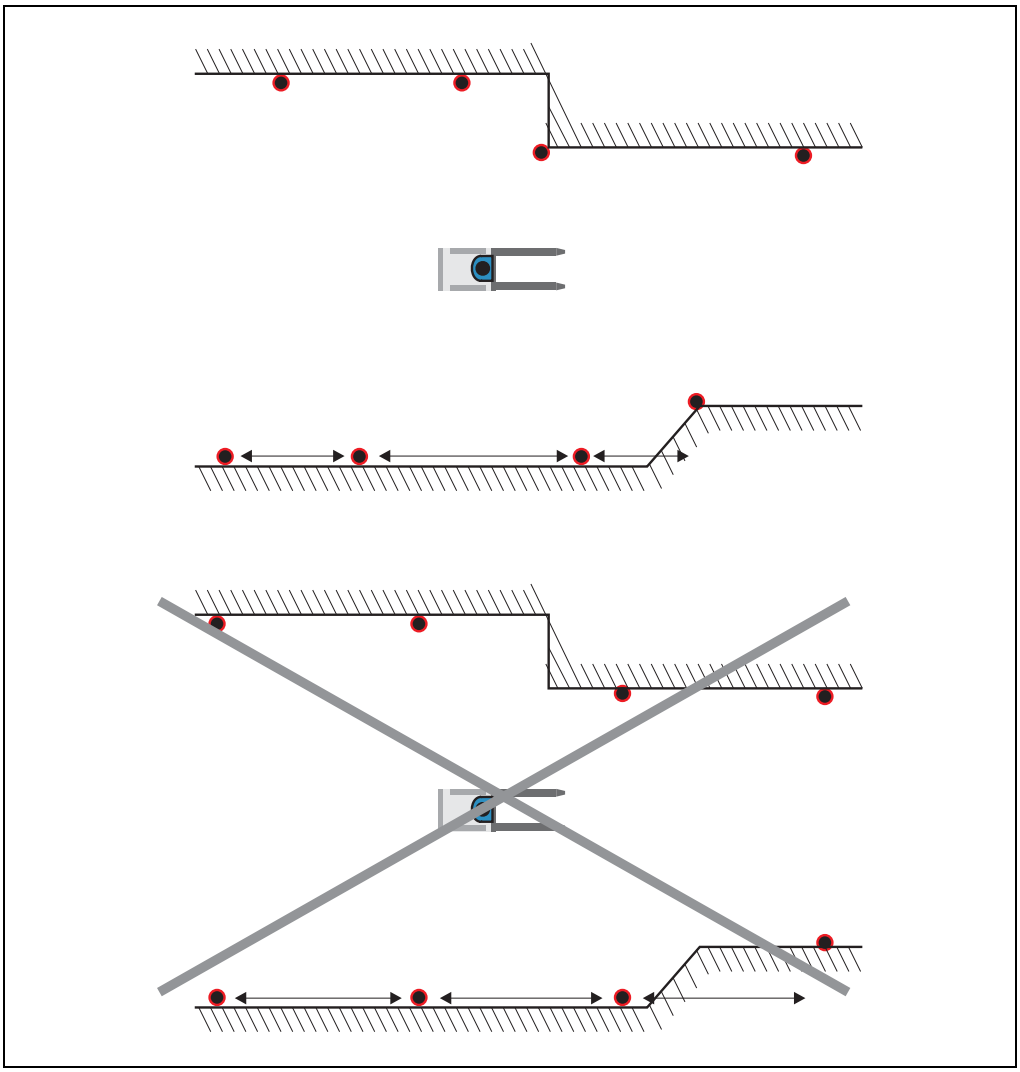

Fig. 24: Correct, asymmetrical placement and incorrect, symmetrical placement of reflectors

During continuous positioning (see *"Continuous positioning" on page 25*) the NAV350 can also process symmetrical reflector placements.

© SICK AG · Germany · All rights reserved · Subject to change without notice

Recommendation

- As not all reflectors are detected during the journey or can be obscured for a time, more than 3 reflectors are always to be used per layer. Five reflectors are recommended. The vehicle's route is to be checked to ensure that at least 3 reflectors can be detected at the same time.
- As far as possible the same number of reflectors is to be fitted to both sides of the route. If the reflectors are only on one side as seen from the NAV350, the positioning accuracy may be reduced by unfavourable geometrical conditions.
- At positions at which very high accuracy is required and on bends, as far as possible there must be 4 or more reflectors within the action radius of NAV350. Also the angle between 2 reflectors must not be more than 120°.
- At positions at which the NAV350 is placed on the route, there must be at least 4 to 6 reflectors in the measurement area of the NAV350. Also the angle between 2 reflectors must not be more than 120°.

In practice the recommendations stated cannot always be implemented. For this reason the reflector positions must be planned as well as possible in relation to these recommendations.

3.10.7 Measurement and entry of the reflector coordinates

After planning and installation of the reflectors, the reflector coordinates must be measured precisely. The NAV350 requires these coordinates for the determination of the position in real-time. The coordinates of the reflectors used are saved in the non-volatile reflector memory in the NAV350 for reference.

There are two methods of measuring and entering the coordinates:

- A surveyor manually measures the positions of all reflectors referred to a common coordinate system. All these coordinates are added to a structured ASCII file on the PC and transferred with the aid of the SOPAS ET configuration software to the NAV350 (see *section 6.6 "Loading reflector data" on page 57*). This transmission can also be made from the vehicle computer using the software telegram ADD LANDMARKS (sMN mNLAYADDLANDMARK).
- Using the MAPPING function and then ADD LANDMARKS (sMN mNLAYADDLANDMARK) the NAV350 can also automatically teach-in the reflector positions. For this purpose the NAV350 requires exactly measured **initial positioning** so that then it can measure the coordinates of all reflectors on the route in succession.

Recommendation

The determination of the reflector positions by a surveyor is more precise and will ensure higher system accuracy.

The MAPPING function of the NAV350 is suitable

 © SICK AG · Germany · All rights reserved · Subject to change without notice

- for measuring new reflectors after initial installation.
- for correcting position changes on the reflectors.
- if only low positioning accuracy is required in the layer/in the system.
- if quick setup is required, e.g. at trade shows and exhibitions.

Division of the route into layers

The reflector data saved in the NAV350 can be allocated to up to 320 layers in groups. Each layer represents a fixed defined area in the AGV's overall route through which the AGV passes. By switching over to the related layer, the NAV350 always only uses for detection the reflector data for the related area through which the vehicle is passing. The switching over between the layers is undertaken by the vehicle computer depending on the location.

Division into layers is used to ...

- keep the NAV350 downward compatible with the NAV200.
- configure a large route more clearly.

A layer must be setup such that the NAV350 can detect as many reflectors as possible in this layer, but as few reflectors as possible in other layers.

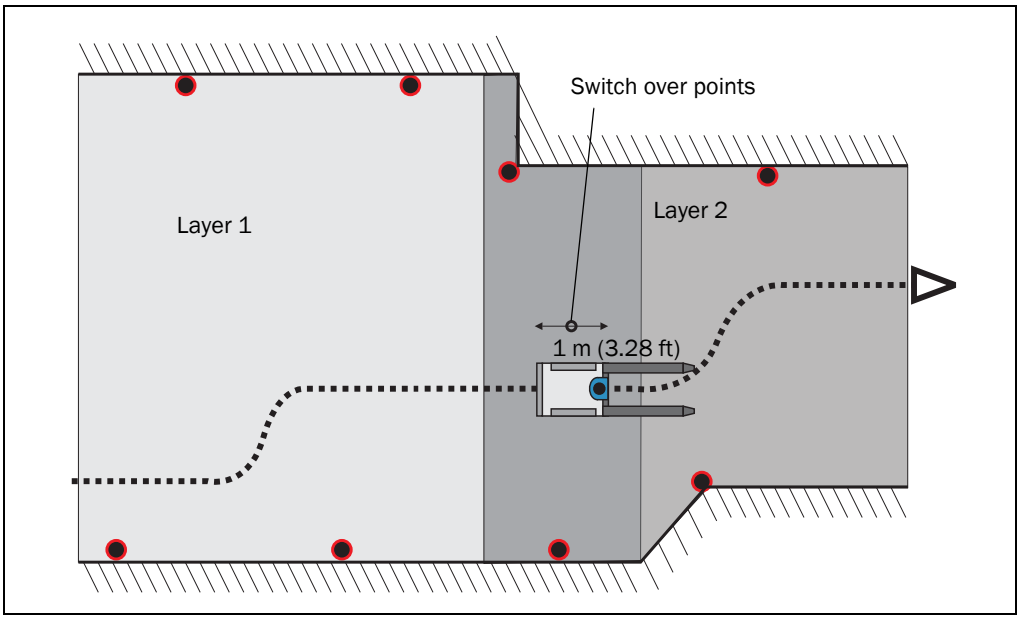

Fig. 25: Common usage of the reflectors from two neighbouring layers

Ideally the transitions between the layers are to be checked such that they take place on **straight** sections of the route. The required switch over by the NAV350 from the reflector data saved for one layer to the data for the neighbouring layer by the vehicle computer should take place in the middle of a section around 1 m (3.28 ft) long.

Recommendation One and the same reflector can be allocated to two different layers. Layers can therefore overlap, a feature that is recommended for a smooth AGV transition between two layers.

© SICK AG · Germany · All rights reserved · Subject to change without notice

4 Mounting

Important Do not open the housing for the NAV350. If the housing is opened, any warranty claims against SICK AG will be rendered void.

4.1 Overview of the mounting steps

- select mounting method for the NAV350
- mounting and adjusting the NAV350

4.2 Preparations for mounting

4.2.1 Components to be mounted

- NAV350 (weight approx. 2.4 kg (5.29 lb)

4.2.2 Material and accessories necessary

- Fixing bracket by the user:
  - Stable mounting bracket that provides adjustable alignment of the NAV350 in the X and Y axis
  - 3 screws M6 for the NAV350, screw length dependent on the wall thickness of the fixing bracket used

4.3 Mounting and adjustment of the device

NOTICE

Risk of damage to the device!

The maximum screw length in the M6 blind threaded hole is 12 mm (0.47 in). Longer screws will damage the NAV350.

➢ Use screws of suitable length.

The NAV350 has three M6 blind thread holes and is fastened using 3 M6 screws (see *section 9.2.1 "Dimensional drawing NAV350" on page 65*).

For secure mounting at least 3 M6 screws with washers and locking washers are required. The supply of power must be switched off.

The NAV350 can be fitted in any position.

1. Prepare surface from mounting the fixing bracket for the NAV350 as described in *section 4.2 "Preparations for mounting" on page 43*.
2. Insert screws in the holes in the bracket and screw into the blind threaded hole in the NAV350. Only tighten screws lightly.
3. The scanner head on the NAV350 must be free to rotate.
4. Align the NAV350.
5. Tighten screws.
6. Check the alignment.

 © SICK AG · Germany · All rights reserved · Subject to change without notice

4.4 Dismantling the NAV350

1. Switch off the supply voltage.
2. Remove the connection cables.
3. Undo screws for mounting the NAV350 to the fixing and remove device.

© SICK AG · Germany · All rights reserved · Subject to change without notice

5 Electrical installation

NOTICE

Only authorised personnel are allowed to perform the electrical installation work.

- Do not open the housing.
- Observe the current safety regulations when working on electrical systems.

Switch the entire machine/system offline!

The machine/system could inadvertently start up while you are connecting the device.

- Ensure that the entire machine/system is disconnected during the electrical installation.

5.1 Overview of the installation steps

1. Wire switching outputs (application-dependent).
2. Temporarily connect PC (configuration).
3. Wire data interface for operation.
4. Connect supply voltage to the NAV350.

5.2 Connections of the NAV350

5.2.1 Connections of the NAV350

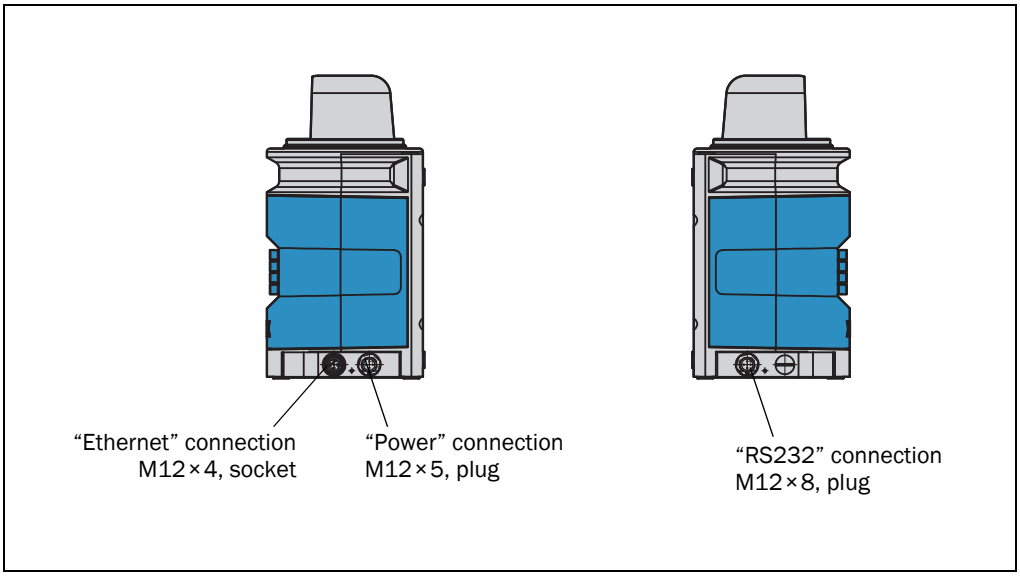

Fig. 26: Connections of the NAV350

The NAV350 has three round multi-pin M12 plug connectors.

 © SICK AG · Germany · All rights reserved · Subject to change without notice

“Power” connection M12 × 5, plug, A coded

	Pin	Signal	Function
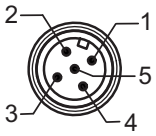	1	V_S	Supply voltage NAV350
	2	V_S	Supply voltage NAV350
	3	GND	Ground
	4	OUT 24 V	Digital output 1
	5	GND	Ground

Tab. 9: Pin assignment of the “Power” connection on the NAV350

“Ethernet” connection M12 × 4, socket, D coded

	Pin	Signal	Function
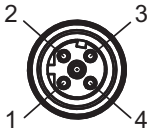	1	Ethernet_TX+	Ethernet interface
	2	Ethernet_RX+	Ethernet interface
	3	Ethernet_TX–	Ethernet interface
	4	Ethernet_RX–	Ethernet interface

Tab. 10: Pin assignment of the “Ethernet” connection on the NAV350

“RS232” connection M12 × 8, plug, A coded

	Pin	Signal	Function
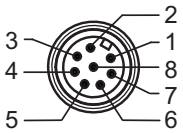	1	RxD	Serial RS232 host interface (receiver)
	2	TxD	Serial RS232 host interface (sender)
	3	–	Do not use
	4	–	Do not use
	5	GND RS-232	Ground RS-232
	6	–	Do not use
	7	–	Do not use
	8	–	Do not use

Tab. 11: Pin assignment of the “RS232” connection on the NAV350

5.3 Preparing the electrical installation

5.3.1 Supply voltage

DC 24 V ±15% as per IEC 60364-4-41 (pay attention to permitted cable lengths in *tab. 12 on page 47*)

The NAV350 draws the following power:

- on switching on without switching outputs wired maximum 36 W
- in operation typically 12 W, plus a maximum of 12 W with switching output wired

The supply of power/the external power supply for the supply of power must be able to provide at least 40 W continuous power, if the switching output is wired at least 48 W continuous power.

 © SICK AG · Germany · All rights reserved · Subject to change without notice

WARNING

Use safety transformer!

The output circuit of the power supply must be safely electrically isolated from the input circuit, this feature is normally provided by a safety transformer in accordance with IEC 742 (VDE 0551).

5.3.2 Wire cross-sections

➢ Wire all connections with copper cables!

➢ Use the following wire cross-sections:

- supply voltage at least 0.25 mm^2 (0.01 in^2), if local supply of power (power supply) in the immediate vicinity
- supply voltage at least 0.5 mm^2 (0.04 in^2) at maximum length of 10 m (32.81 ft), if connection is made to an existing DC 24 V supply
- data interface minimum 0.25 mm^2 (0.01 in^2)

➢ Lay all cables such that there is no risk of tripping and all cables are protected against damage.

On the usage of a typical power supply with a nominal voltage of DC 24 V ±5%, the following maximum cable lengths are allowed for the supply of the operating voltage:

Wire cross-section	Cable length
0.25 mm^2 (0.01 in^2)	5 m (16.4 ft)
0.5 mm^2 (0.02 in^2)	10 m

Tab. 12: Maximum cable lengths for the supply voltage

5.3.3 General conditions for the data interface

The table below shows the recommended maximum length of cable.

Interface type	Transmission rate	Maximum cable length
RS-232	115,200 Bd	10 m

Tab. 13: Maximum length of cable for the data interface

Important

- Use screened cable (twisted-pair) with at least 0.25 mm^2 (0.01 in^2).
- To prevent interference, do not lay data cable in parallel with power supply and motor cables over a long run, e.g. in cable ducts.

5.4 Undertaking electrical installation on the NAV350

5.4.1 Equipment

- tool set
- digital multimeter (current/voltage measurement)

NOTICE

Only connect in electrically isolated state!

➢ Ensure the power supply to which the NAV350 is connected is switched off.

© SICK AG · Germany · All rights reserved · Subject to change without notice

5.4.2 Connecting supply voltage

Pre-assembled cables with flying leads are available for the supply to the NAV350.

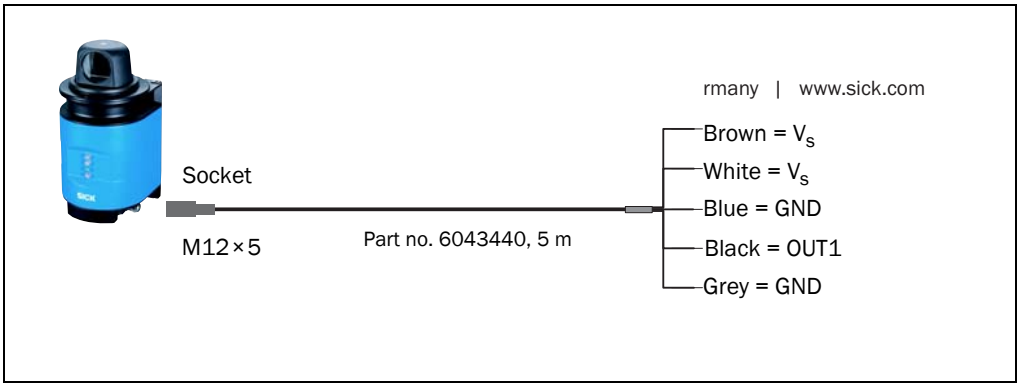

Fig. 27: Connection of the voltage supply

5.4.3 Connection to the Ethernet interface

Pre-assembled cables are available to configure the NAV350 via the Ethernet interface.

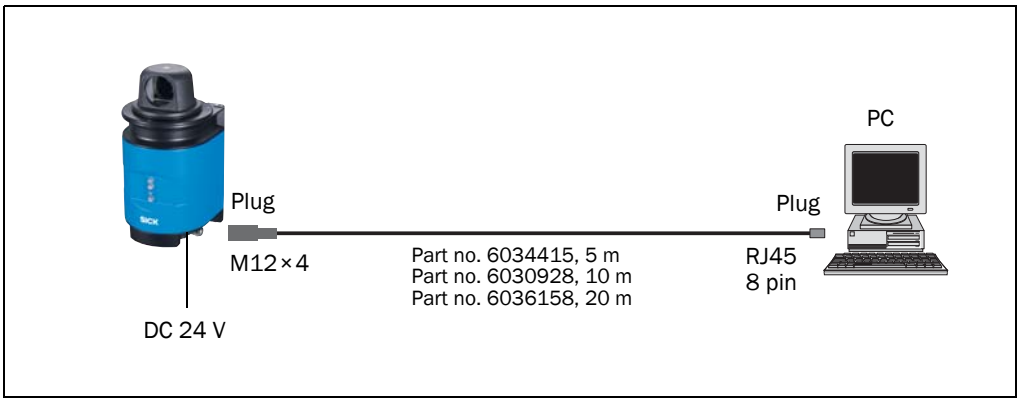

Fig. 28: Ethernet connection

5.4.4 Connection at the RS-232 interface

A screened cable is required for the wiring of the RS232 interface.

➢ Pay attention to max. cable length as per *section 5.3.3 "General conditions for the data interface" on page 47*.

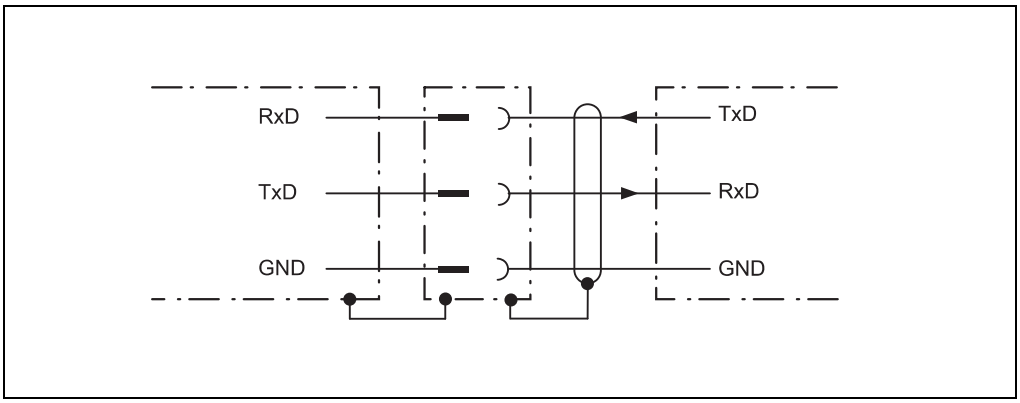

Fig. 29: Wiring the RS232 interface

© SICK AG · Germany · All rights reserved · Subject to change without notice

Pre-assembled cables are available for the configuration of the NAV350 via the RS-232 interface.

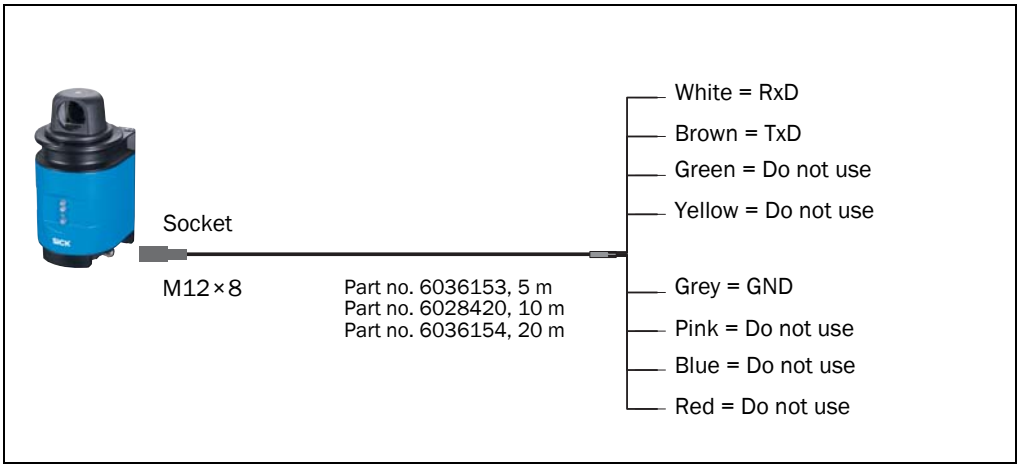

Fig. 30: RS232 connection

© SICK AG · Germany · All rights reserved · Subject to change without notice

6 Commissioning and configuration

WARNING

The NAV350 must be commissioned only by adequately qualified personnel.

Before you operate a machine/system equipped with the NAV350 for the first time, make sure that the system is first checked and released by qualified personnel. On this issue, observe the notes in *chapter 2 "For your safety" on page 10*.

Commissioning, configuration and diagnostics are undertaken using the SOPAS ET configuration software supplied.

6.1 Overview of the commissioning steps

- Mounting and electrical installation must be undertaken.
- Install SOPAS ET configuration software.
- Establish communication with the NAV350.
- Create a custom parameter set using SOPAS ET and save in non-volatile memory in the NAV350.
- Test NAV350 for correct function.
- On usage for position output:
  - Plan reflector positions and mount reflectors.
  - Measure or teach-in reflectors.
  - Enter positions of the reflectors measured or read positions from an ASCII file and enter parameters for the reflectors in SOPAS ET.
- On usage for landmark detection:
  - Plan reflector positions and mount reflectors.
  - Enter parameters for the reflectors in SOPAS ET.

© SICK AG · Germany · All rights reserved · Subject to change without notice

6.2 SOPAS ET configuration software

The interactive configuration is carried out using SOPAS ET. Using this configuration software, you can configure and test the measurement properties, the analysis behaviour and the output properties of the NAV350 as required. The configuration data can be saved as a parameter set (project file) on the PC and archived.

Help for the program user interface as well as for the different options can be found in SOPAS ET:

- menu HELP, HELP F1: comprehensive online help for the program interface and for the different options
- HELP window (on the bottom left in the program user interface): context sensitive help for the visible dialog
- tool tips: Move the mouse pointer over an input field. A short text (“tool tip”) with information about valid entries appears.

Primary functions are:

- selection of the menu language (German/English)
- establishment of the communication with the NAV350
- password-protected configuration with different operating levels
- diagnostics of the NAV350

6.2.1 Installation of SOPAS ET

Download the latest SOPAS ET software on the internet www.sick.com. The download’s size is about 150MB. It includes the setup.exe installing the SOPAS Engineering Tool.

To complete the installation, follow the instructions.

6.2.2 SOPAS ET default setting

Parameter	Value
Language for the user interface	English (the software must be re-started after a change)
Units of length	Metric
User group (operating level)	Machine operator
Download the parameters to the NAV350	Immediate on change, temporary in the NAV350 RAM
Upload the parameters from NAV350	After switching online, automatic
Window layout	3 (project tree, help, working area)
Serial communication	COM1: 9,600 Bd/115,200 Bd, 8 data bits, even parity, 1 stop bit

Tab. 14: SOPAS ET default setting

6.3 Establish communication with the NAV350

Important For communication via TCP/-IP, the TCP/-IP protocol must be active on the PC.

On the connection of PC/host, following this sequence:

1. Switch on the PC.
2. Connect PC to the NAV350 using data cable.
3. Switch on the supply voltage for the NAV350.
   The NAV350 performs a self-test and initialises itself.

© SICK AG · Germany · All rights reserved · Subject to change without notice

6.3.1 Connect the data interfaces

➢ Connect the PC to the NAV350 using the Ethernet cable (see *fig. 28 on page 48*)

or

➢ Connect the PC (serial interface) to the NAV350 (see *fig. 29 on page 48*)

6.3.2 Starting SOPAS ET and opening the scan assistant

1. Start SOPAS ET.
   By default SOPAS ET opens the program window with the English user interface.
2. To change the language setting, in the start dialog box click CANCEL and using the menu TOOLS, OPTIONS change the language for the user interface to GERMAN.
3. If the language setting has been modified, quit SOPAS ET and re-start.
4. In the dialog box, choose the option CREATE NEW PROJECT and confirm with OK.
5. In the main window in SCAN ASSISTANT click the CONFIGURATION button.
   The SCAN ASSISTANT dialog box appears.

6.3.3 Configuring the serial connection

1. In the SCAN ASSISTANT dialog box, under SERIAL CONNECTION, STANDARD PROTOCOL, activate the ACTIVATE SERIAL COMMUNICATION checkbox.
2. Click ADVANCED... button.
3. In COLA DIALECT choose the ASCII option.
4. Choose following PORT SETTINGS: 8 data bits, even parity, 1 stop bit.
5. Confirm the settings with OK.
   The ADVANCED SCAN SETTINGS dialog box is closed.
6. Confirm the settings in the SCAN ASSISTANT dialog box with OK.
   The SCAN ASSISTANT dialog box is closed.

6.3.4 Configuring the Ethernet connection

The factory setting for the Ethernet interface of the NAV350 is as follows:

- IP address: 192.168.1.10
- subnet mask: 255.255.255.0
- TCP/ IP port for SOPAS ET: 2111

Configuring with fixed IP address

Important Deactivate all programs on your PC/notebook that access Ethernet or TCP/IP.

1. From the START MENU, click CONTROL PANEL and choose NETWORK CONNECTIONS.
2. Right-click the LOCAL AREA CONNECTION icon, and then choose PROPERTIES.
3. On the GENERAL tab, highlight INTERNET PROTOCOL (TCP/IP), and then click PROPERTIES
4. Select USE THE FOLLOWING IP ADDRESS, and enter the following IP address: 192.168.1. x (e.g. 1)
5. Confirm with OK

© SICK AG · Germany · All rights reserved · Subject to change without notice

Then adjust the IP configuration for the NAV350 in SOPAS ET.

1. In the NETWORK SCAN ASSISTANT dialog box, under INTERNET PROTOCOL, INTERNET PROTOCOL,
   activate the ENABLE IP COMMUNICATION checkbox and deactivate ENABLE AUTOIP checkbox
2. Click ADD button.
3. Enter in SINGLE ADRESS 192.168.1.10
4. In the SCAN-ASSTSTANT dialog confirm the settings with OK.
   The ADD ADRESS dialog box is closed.

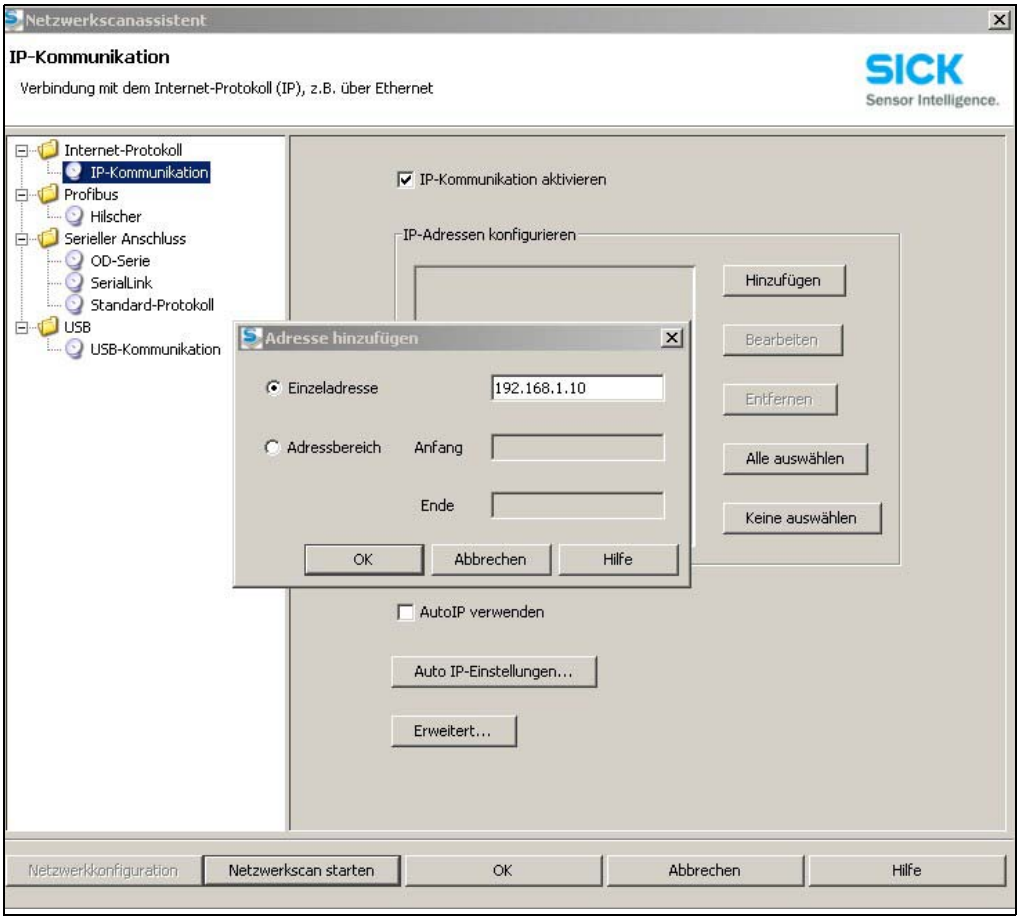

Fig. 31: IP communication with fixed IP address

5. Click ADVANCED... button
6. Under TCP PORT(S) deactivate port 2112 and confirm with OK.

© SICK AG · Germany · All rights reserved · Subject to change without notice

Configuring with AutoIP

Important Deactivate all programs on your PC/notebook that access Ethernet or TCP/IP.

1. In the NETWORK SCAN ASSISTANT dialog, under INTERNET PROTOCOL, IP COMMUNICATION, select the ACTIVATE IP COMMUNICATION checkbox and the USE AUTOIP checkbox.
2. Click AUTO IP CONFIGURATION Button
3. Click SEARCHING FOR SENSORS Button to verify that the device is CONNECTABLE
4. If the status is NOT CONNECTABLE , highlight the device and follow instructions 5.-7. If the status is CONNECTABLE, close the dialog box with OK and start the NETWORK SCAN
5. Click CHANGE IP CONFIGURATION

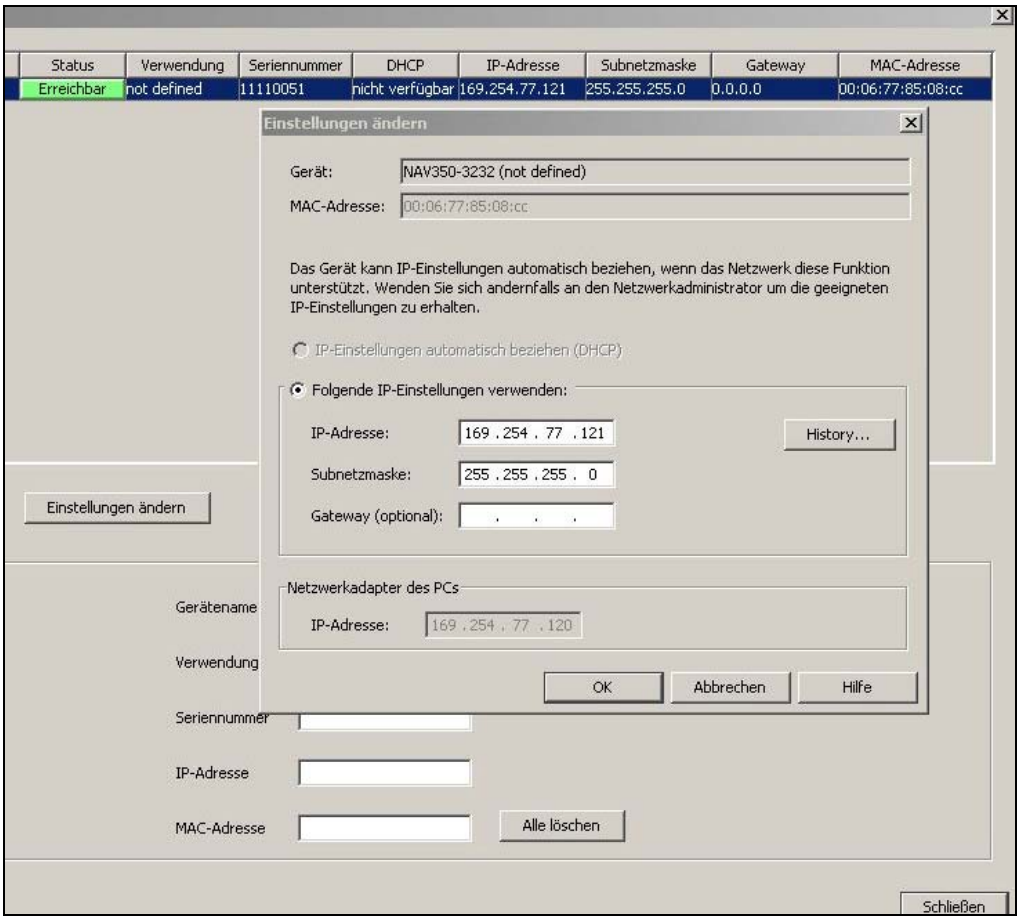

Fig. 32: Configuring with AutoIP

6. Enter the IP ADRESS of your PC NETWORK ADAPTER incremented by one in IP ADDRESS under USE THE FOLLOWING IP SETTINGS, e.g.:
   IP address under PC Network adapter = 169.192.88.120
   IP ADDRESS under USE THE FOLLOWING IP SETTINGS = 169.192.88.121
7. Confirm the settings in the NETWORK SCAN ASSISTANT dialog box with OK. The SCAN ASSISTANT dialog box is closed.

© SICK AG · Germany · All rights reserved · Subject to change without notice

6.3.5 Performing scan

1. In the NETWORK SCAN ASSISTANT dialog box, click on the NETWORK SCAN button.
2. Choose devices listed and accept using ADD.
   A scan is performed for devices connected via the connection. SOPAS ET adds the devices found to the project tree and uploads the actual parameter set from the device.

6.4 Initial commissioning

The NAV350 is adapted to the local measurement situation using SOPAS ET. For this purpose a custom parameter set is created using SOPAS ET.

The parameter set is then loaded into the NAV350 (download). This action is performed either immediately (SOPAS ET option IMMEDIATE DOWNLOAD) or manually (SOPAS ET command DOWNLOAD ALL PARAMETERS to the device).

Important Once the configuration has been completed, the parameter set must be saved in non-volatile memory in the NAV350. In addition, the parameter set should be saved as a project file (spr file with configuration data) on the PC and archived.

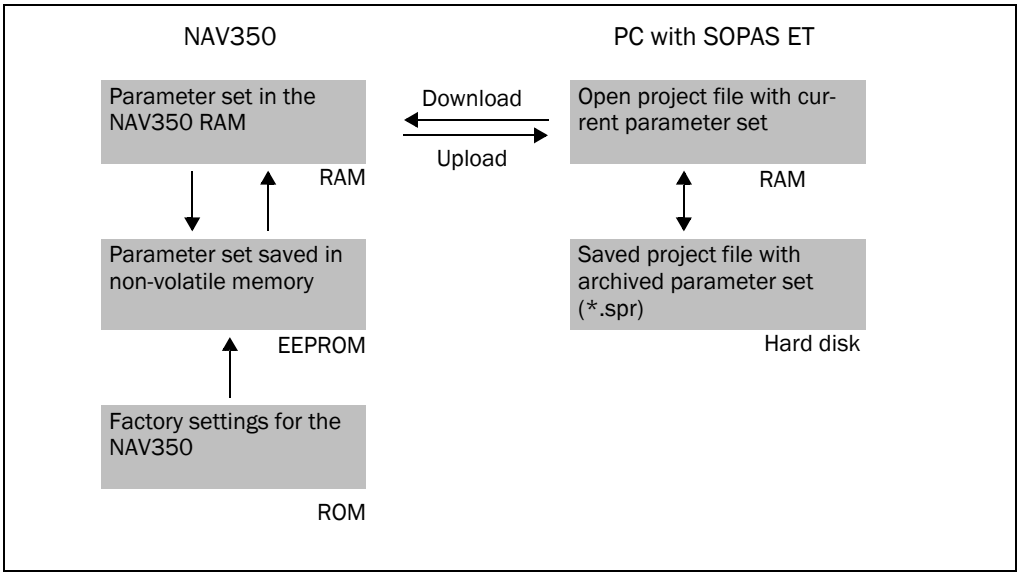

Fig. 33: Principle of data storage

© SICK AG · Germany · All rights reserved · Subject to change without notice

6.4.1 Configuring the NAV350

You can configure the NAV350 in two ways:

- interactively using SOPAS ET
  This section describes the interactive configuration.
- using configuration telegrams
  On this subject please read *section 3.9.2 "Data communication using telegrams" on page 32*.

Interactive configuration using SOPAS ET

All parameters that can be configured for the NAV350 are combined into a corresponding device description (sdd file) for SOPAS ET. You can open this file using the device description project tree.

The function of each parameter is explained in a context-sensitive online help ([F1] key). The valid range of values and the default are listed in the PARAMETER INFO window (right mouse button when the pointer is positioned over the parameter).

Important Software access to the NAV350 is password protected. using screws of the are sealed. Claims under the warranty against SICK AG will be rendered void if the seals are damaged

User level	Password
Authorised client	client

Tab. 15: Password NAV350

Use the project tree in SOPAS ET to configure the parameters necessary for your application.

NOTICE

Do not switch off the voltage supply during configuration!

Switching off the voltage supply during configuration causes all parameters already configured to be lost.

1. From the OPTIONS menu select the LOGIN DEVICE command and log in to the system using the password "client" as AUTHORISED CLIENT.
2. Configure the NAV350 for the required application with the aid of the parameters in SOPAS ET.

Help for the program user interface as well as for the different options can be found in SOPAS ET.

6.5 Connection and test measurement

Use the graphic scan view in SOPAS ET to verify the generated measured values and to verify the measurement area online.

1. Select NAV350, MONITOR, SCAN DISPLAY in the project tree.
2. To start the measurement, click the PLAY button.
3. Compare the measurement line with the required result.

© SICK AG · Germany · All rights reserved · Subject to change without notice

Important

– The SCAN VIEW in the MONITOR is dependent on the available computing power of the PC and is not output in real-time. For this reason not all measured values are displayed. The same limitation also applies when saving measured values displayed in a file.

4. After completing the test measurement successfully, save the configuration permanently to the NAV350: Menu NAV350, PARAMETER, SAVE PERMANENT.

6.6 Loading reflector data

Measured reflectors can be written to a text file instead of entering the data in SOPAS ET. The reflector data saved in the text file must be in ASCII format and can be edited using any text editor. The files must have the file extension .IMK.

Such a file contains all the information for one or more layers: X and Y coordinates as well as the reflector radius.

```
#SICK AG
#NAV Layout data
#FileFormat: 0.01
#Sopas NAV350 V1.00 30.11.2010
#Used Layers:
#LayerID #landmarks
#  000         5
#
globID     x[mm]     y[mm] type subtype size[mm] layer1 layer2 layer3
000001      1855       218    1       2       80      0
000002     -1254      -486    1       2       80      0
000003     -1243     -1094    1       2       80      0
000004      -111      -752    1       2       80      0
000005      1928      -245    1       2       80      0
```

Fig. 34: Example text file with reflector data

The text file is divided into the following elements (from top to bottom):

- The header lines provide version information.
  (They are marked as comment lines with a hash (#) at the start of the line.)
- The lines with the actual coordinates contain 9 columns (from left to right):
  - global identification number
  - X coordinate (mm)
  - Y coordinate (mm)
  - landmark type (1 = reflector (fixed defined))
  - landmark sub-type (2 = cylindrical (fixed defined))
  - reflector diameter
  - Used in layer no. (In the example all reflectors are used in the layer with the layer index 0.) A reflector can be used in up to 3 layers.

Important On the manual preparation of the text file, at least one space character or tab character must be used as the separator character in the rows of data.

Reflector data can be read from and saved in a corresponding text file on a data medium using the buttons OPEN and SAVE.

 © SICK AG · Germany · All rights reserved · Subject to change without notice

7 Maintenance

Important **Claims under the warranty rendered void!**

The housing screws of the NAV350 are sealed. Claims under the warranty against SICK AG will be rendered void if the seals are damaged or the device opened. The housing is only allowed to be opened by authorised service personnel.

7.1 Maintenance during operation

The NAV350 is maintenance-free apart from the maintenance measures listed below. No maintenance is necessary to ensure the retention of laser class 1.

Recommendation To obtain the full optical power of the NAV350, the window in the scanner head of the NAV350 should be regularly checked for contamination. This applies particularly in harsh operating environments (dust, powder, moisture).

NOTICE

Damage to the optics in the NAV350!

The window in the scanner head on the NAV350 is made of glass. The optical power is reduced by scratches and smearing on the front screen.

- Do not use aggressive detergents.
- Do not use abrasive cleaning agents.
- Only use fabric cleaning cloths or paper towels free of wood and fluff.
- Avoid scratching and scouring movements on the window.

NOTICE

Performance reduction due to contamination of the window in the scanner head!

Static charges cause dust particles to be attracted to the window of the NAV350. You can prevent this effect by using the antistatic plastic cleaner (part no. 5600006) and the SICK lens cloth (part no. 4003353).

Fig. 35: Window in the scanner head on the NAV350

© SICK AG · Germany · All rights reserved · Subject to change without notice

How to clean the window in the scanner head on the NAV350:

1. Switch off the NAV350 while performing cleaning, as otherwise the scanner head will rotate.
2. Use a clean and soft brush to remove dust from the window.
3. Then wipe off the optics using a clean and damp cloth.

Important If the optics are scratched or damaged (crack, fracture), the optics must be replaced. Contact SICK service.

7.2 Exchanging a NAV350

As all external cable connections end in the plug connectors, it is not necessary to re-install the device electrically on a device replacement. The replacement unit can then be simply connected.

If the NAV350 is to be replaced, proceed as follows:

1. Switch off the voltage supply for the NAV350.
2. Remove the connection cables from the NAV350.
3. Mounting the replacement device (see *chapter 4 “Mounting” on page 43*).
4. Open project file (spr file with configuration data) using SOPAS ET and transfer configuration to the device (see *fig. 33 on page 55*).

 © SICK AG · Germany · All rights reserved · Subject to change without notice

8 Troubleshooting

Important **Claims under the warranty rendered void!**

The housing screws of the NAV350 are sealed. Claims under the warranty against SICK AG will be rendered void if the seals are damaged or the device opened. The housing is only allowed to be opened by authorised service personnel.

This chapter describes how to identify and rectify errors and malfunctions during the operation of the NAV350.

8.1 In the event of fault

WARNING

Cease operation if the cause of the malfunction has not been clearly identified!

Stop the machine/system if you cannot clearly identify or allocate the error and if you cannot safely rectify the malfunction.

8.2 Monitoring error and malfunction indications

The NAV350 monitors itself in operation:

© SICK AG · Germany · All rights reserved · Subject to change without notice

- After switching on the supply voltage the NAV350 runs through a self-test prior to initial--isation (loading the parameter set and initialisation of the device functions); during this self-test the device checks important hardware components.
- During operation the NAV350 continuously monitors the function of the rotation of the scanner head.
- If the NAV350 detects a device error during the self-test, it indicates this situation using the LEDs.

8.3 Troubleshooting and rectification

Fault	Possible cause	Solution
1. All LEDs are off and the scanner head is not rotating.	• No supply voltage at the connec-tion terminals	➢ Check supply voltage (see *section 9.1 "Data sheet NAV350" on page 63*). ➢ Check whether supply cables are correctly fitted in the connection plug. ➢ Check whether cables are connected to the correct terminals.
2. No LED is illuminated. The scanner head only rotates briefly.	• Excessively low supply voltage	➢ Increase wire cross-section.
3. Red LED is illuminated.	• Scanner head does not rotate and is locked.	➢ Disconnect supply voltage and re-connect. If the red LED is still illuminated, inform SICK
4. SOPAS ET cannot communicate with the NAV350.	• Supply voltage for the NAV350 not switched on	➢ See fault 1., 2. and 3.
	• PC not connected to NAV350	➢ Connect PC to NAV350 (use data cable to suit interface type).
	• Wrong interface selected	➢ Select interface in SOPAS ET as per the connection made to the PC.
	• Another application on the PC is already accessing the interface.	➢ Check assignment of the interface, if necessary quit related application.
	• Pay attention to sequence when switching on the NAV350 and the PC connected.	➢ 1. Switch on the PC. 2. Connect PC to NAV350. 3.Switch on NAV350.
5. Measurements in the near range with no objects present	• Contaminated or scratched optics	➢ Carefully clean optics using soft, fluff-free cloth. If the optics are scratched, contact SICK service.
6. The NAV350 is not detecting existing objects.	• Smoke and dust	➢ Check whether the scanner head is clean and dry.
7. The NAV350 is not transmitting a measured result.	• Wiring fault in the data connection	➢ Check wiring.
8. Frequent CRC error on the RS232 interface.	• Data transmission time critical	➢ Increase the baud rate.

Tab. 16: Troubleshooting and rectification

8.4 Detailed error analysis

Communication errors can occur on the transfer of telegrams to the NAV350. The NAV350 then returns an error code that you can evaluate (see ""NAV350 Telegram listing", part- no.: 8013893).

© SICK AG · Germany · All rights reserved · Subject to change without notice

8.5 SICK support

If a fault cannot be rectified with the measures stated, the NAV350 may be faulty. The NAV350 cannot be repaired or its functionality restored by the user after a failure.

However, quick replacement of a NAV350 by the user is possible. On this subject see *chapter 7.2 "Exchanging a NAV350" on page 59*.

In case of a fault that cannot be rectified, please contact SICK service:

Please contact your SICK subsidiary.

- For telephone number and e-mail addresses see rear of these operating instructions.
- For postal addresses see also **www.sick.com**.

➢ Do not send device without consultation with SICK service.

Important Repairs to the NAV350 are only allowed to be undertaken by trained and authorised service personnel from SICK AG.

8.5.1 Monitor

Using the monitor you can display the measured data, the detected reflectors and the position of the NAV350.

PROJECT TREE, NAV350, MONITOR, SCAN DISPLAY.

© SICK AG · Germany · All rights reserved · Subject to change without notice

9 Technical specifications

9.1 Data sheet NAV350

Feature	NAV350
Navigation[1)]	
Measurement area[2)]	0.5 ... 70 m (1.64 ... 229.66 ft) on reflectors
Angular resolution (step width)	360°
Accuracy of the distance measurement	4 mm (0.16 in) at reflector distance up to 10 m(32.81 ft) 10 mm (0.39 in) at reflector distance up to 20 m (65.62 ft) 15 mm (0.59 in) at reflector distance up to 30 m (98.43 ft) >25 mm (0.98 in) at reflector distance up to 50 m (164.04 ft)
Accuracy of the angular measurement	±0,10° at reflector distance up to 10m ±0,15° at reflector distance up to 30m ±0,25° at reflector distance > 30m
Frequency of the position measurement[3)]	8Hz ±5%
Landmark detection[4)]	
Measurement area	0.5 ... 70 m (1.64 ... 229.66 ft) on reflectors
Angular resolution (step width)	360°
Angular resolution	0.1°
Systematic error of the distance measurement	±10 mm (0.39 in) (25 °C) on reflectors
Statistical error of the distance measurement (1 sigma)	10 mm (0.39 in) on reflectors
Systematic error[5)] of the angular measurement	±0,10° at reflector distance up to 10m ±0,15° at reflector distance up to 30m ±0,25° at reflector distance > 30m
Statistical error of the angular measurement (1 sigma)	0.05° on reflectors
Temperature drift	typ. ±0,6 mm/K
Output of measured values	
Measurement area[6)]	0.5 ... 35 m (1.64 ... 114.83 ft), at 10% reflection 0.5 ... 50 m (1.64 ... 164.04 ft), at 20% reflection 0.5 ... 100 m (1.64 ... 328.08 ft), at 90% reflection Maximum 0.5 ... 250 m (1.64 ... 820.21 ft)
Angular resolution (step width)	360°
Angular resolution (step width)	0.25° fixed
Scanning frequency	8 Hz ±5%
Measurement resolution	1 mm (0.04 in)
Systematic error	±15 mm (25 °C) at 20 ... 90% reflection
Statistical error distance (1 sigma)	15 mm (0.59 in) at 20 ... 90% reflection
Temperature drift	typ. ±0,6 mm/K
General data	

Tab. 17: Data sheet NAV350

 © SICK AG · Germany · All rights reserved · Subject to change without notice

Feature	NAV350
Beam divergence	5.0 mrad
Laser diode (wavelength)	Infrared light (λ = 905 nm)
Pulse frequency	11.5 kHz
Laser class of the device	Class 1 as per EN 60825-1:2014+A11:2021, IEC 60825-1:2014, EN/IEC 60825-1:2007, eye safe, complies with 21CFR 1040.10 and 1040.11 expect for deviations pursuant to Laser Notice No. 50, dated June 24, 2007.
RS-232 data interface	19.200; 38.400; 57.600; default: 115.200 Bd
Data format	Variable; default: 8 data bits, 1 stop bit, even parity
Output signal switching device	100 MBit/s, TCP/IP
Operating voltage	Semiconductor output, active high, maximum output current 0.5 A at DC 24 V
Power consumption for electronics	DC 24 V ±15%/IEC 60364-4-41 (VDE 0100 part 410)
EMC test	Switching on: max. 36 W (1.5 A) at DC 24 V, on power up briefly 2.1 A
Housing	AccordingtoEN 61000-6-2(2005-08)/EN 61000-6-4(2007-01)
Housing	Aluminium die-cast
Enclosure rating	III according to EN 61140 (2002-03)
Enclosure rating	IP 65 according to EN 60529 (1991-10); A1 (2002-02)
Vibration test	According to IEC 60068-2-6, table 2c (frequency range 10 ... 150 Hz, amplitude 0,35 mm or 5 g)
Weight	Approx. 2.4 kg
Ambient operating temperature/storage temperature	0 ... +50 °C/–20 ... +80 °C
Max. relative air humidity	5 ... 85 %, non-condensing

Tab. 17: Data sheet NAV350

1) The technical data are typical values at 25 °C for operation in industrial environments for standing AGV and when using cylindrical reflectors with a diameter of 80 mm (3.15 in) from reflective tape 983-10 (article No. 5320565). Further conditions are: At least six reflectors must be seen per measurement, there must be an equal number of reflectors on each side of the route, the angle between two reflectors must not be more than 120°.
2) Condition: laser spot completely on the target, warm-up time min. 30 min.
3) Valid for position queries using the telegram MNPOSGETPOSE.
4) The technical data are typical values for operation in an industrial environment at 25 °C with the AGV stationary and on the usage of cylindrical reflectors with a diameter of 80 mm (3.15 in).
5) The data are typical values, condition: laser spot completely on the target, warm-up time min. 30 min.
6) Condition: laser spot completely on the target, warm-up time min. 30 min.

© SICK AG · Germany · All rights reserved · Subject to change without notice

9.2 Dimensional drawings

9.2.1 Dimensional drawing NAV350

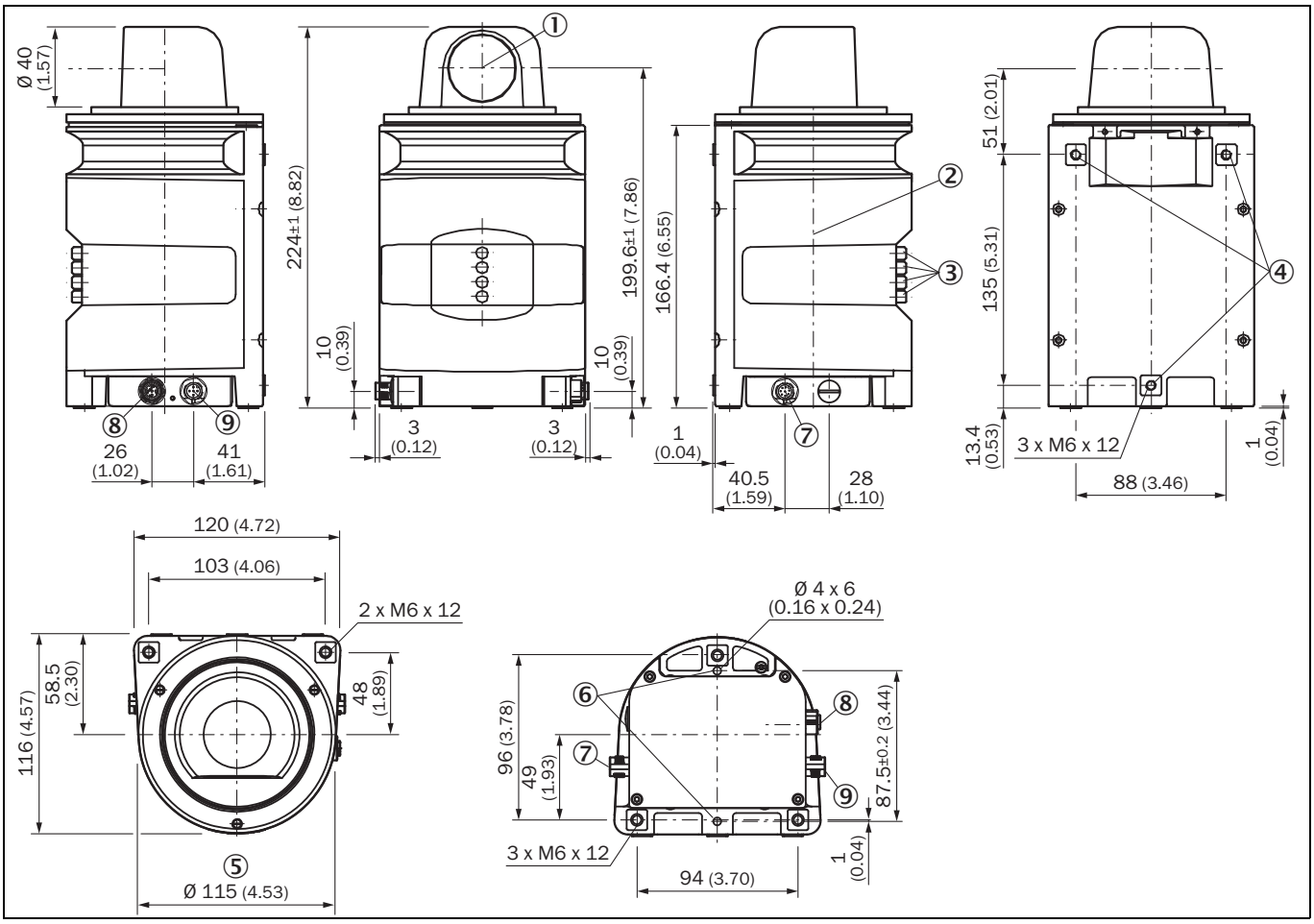

Abb. 36: Dimensions NAV350

① Optical axis
② Center of mass
③ LED (top to bottom: yellow, yellow, green, red)
④ Fastening bore (M6x12)
⑤ Rotational diameter
⑥ Adjustment bore
⑦ RS232 connection (M12x4, plug)
⑧ Ethernet connection (M12x4, device socket)
⑨ Power connection (12x5, plug)

© SICK AG · Germany · All rights reserved · Subject to change without notice

10 Annex

10.1 Overview of the annexes

The annex contains the following supplementary information:

- Ordering information
- Glossary
- Link to Declarations of conformity and certificates

10.2 Ordering information

10.2.1 Consumables

Part number	Type	4Description
4003353	Lens cloth	Special cloth for correctly cleaning the window
5600006	Plastic detergent	Antistatic, mild detergent solution

Tab. 18: Consumables

© SICK AG · Germany · All rights reserved · Subject to change without notice

10.3 Glossary

Download

Transmission of the parameter set that has been modified offline in the SOPAS ET configuration software from the PC to the NAV350. SOPAS ET transmits either always a complete copy to the memory (RAM) of the NAV350 (menu COMMUNICATION, DOWNLOAD ALL PARAMETERS TO DEVICE) or only the parameter that has just been edited (menu COMMUNICATION, DOWNLOAD MODIFIED PARAMETERS TO DEVICE). With menu NAV350, PARAMETER, SAVE PERMANENT, the parameter set is saved permanently in the EEPROM of the NAV350.

Parameter set

Data set using which the functions implemented in the NAV350 are initialised and activated. Is transmitted from the NAV350 to SOPAS ET and in the reverse direction using UPLOAD or DOWNLOAD respectively.

Remission

Remission is the quality of reflection at a surface. The basis is the Kodak standard, known worldwide in, among other areas, photography. The surface-related magnitude of the remission is the remission value.

Scan

A scan includes all measured values determined related to the scan angle.

SOPAS ET

Configuration software, used for the offline configuration (adaptation to the read situation on-site) and the online operation of the NAV350 in dialog mode.

Upload

Transmission of the parameter set from the NAV350 to the PC into the SOPAS ET configuration software. The values for the parameters are displayed on the file cards of the configuration software. Prerequisite for the modification of the current parameter set.

© SICK AG · Germany · All rights reserved · Subject to change without notice

10.4 Declarations of conformity and certificates

At the following address you will find the declarations of conformity and certificates valid for the product: www.sick.com/NAV3xx

10.5 Cybersecurity

To protect against cybersecurity threats, it is necessary to continuously monitor and maintain a comprehensive cybersecurity concept. A suitable concept consists of organizational, technical, procedural, electronic, and physical levels of defense and considers suitable measures for different types of risks. The measures implemented in this product can only support protection against cybersecurity threats if the product is used as part of such a concept.
You will find further information at **www.sick.com/psirt**, e.g.:

- General information on cybersecurity
- Contact option for reporting vulnerabilities
- Information on known vulnerabilities (security advisories)

© SICK AG · Germany · All rights reserved · Subject to change without notice

 © SICK AG · Germany · All rights reserved · Subject to change without notice

8013889/1MJA/2024-01-19/8M_SH · A4 4c int47

Australia
Phone +61 3 9457 0600
1800 334 802 – tollfree
E-Mail sales@sick.com.au

Austria
Phone +43 22 36 62 28 8-0
E-Mail office@sick.at

Belgium/Luxembourg
Phone +32 2 466 55 66
E-Mail info@sick.be

Brazil
Phone +55 11 3215-4900
E-Mail marketing@sick.com.br

Canada
Phone +1 905 771 14 44
E-Mail information@sick.com

Czech Republic
Phone +420 2 57 91 18 50
E-Mail sick@sick.cz

Chile
Phone +56 2 2274 7430
E-Mail info@schadler.com

China
Phone +86 20 2882 3600
E-Mail info.china@sick.net.cn

Denmark
Phone +45 45 82 64 00
E-Mail sick@sick.dk

Finland
Phone +358-9-2515 800
E-Mail sick@sick.fi

France
Phone +33 1 64 62 35 00
E-Mail info@sick.fr

Germany
Phone +49 211 5301-301
E-Mail info@sick.de

Hong Kong
Phone +852 2153 6300
E-Mail ghk@sick.com.hk

Hungary
Phone +36 1 371 2680
E-Mail office@sick.hu

India
Phone +91 22 6119 8900
E-Mail info@sick-india.com

Israel
Phone +972 4 6881000
E-Mail info@sick-sensors.com

Italy
Phone +39 02 274341
E-Mail info@sick.it

Japan
Phone +81 3 5309 2112
E-Mail support@sick.jp

Malaysia
Phone +6 03 8080 7425
E-Mail enquiry.my@sick.com

Mexico
Phone +52 (472) 748 9451
E-Mail mario.garcia@sick.com

Netherlands
Phone +31 30 2044 000
E-Mail info@sick.nl

New Zealand
Phone +64 9 415 0459
0800 222 278 – tollfree
E-Mail sales@sick.co.nz

Norway
Phone +47 67 81 50 00
E-Mail sick@sick.no

Poland
Phone +48 22 539 41 00
E-Mail info@sick.pl

Romania
Phone +40 356 171 120
E-Mail office@sick.ro

Russia
Phone +7 495 775 05 30
E-Mail info@sick.ru

Singapore
Phone +65 6744 3732
E-Mail sales.gsg@sick.com

Slovakia
Phone +421 482 901201
E-Mail mail@sick-sk.sk

Slovenia
Phone +386 591 788 49
E-Mail office@sick.si

South Africa
Phone +27 11 472 3733
E-Mail info@sickautomation.co.za

South Korea
Phone +82 2 786 6321
E-Mail info@sickkorea.net

Spain
Phone +34 93 480 31 00
E-Mail info@sick.es

Sweden
Phone +46 10 110 10 00
E-Mail info@sick.se

Switzerland
Phone +41 41 619 29 39
E-Mail contact@sick.ch

Taiwan
Phone +886 2 2375-6288
E-Mail sales@sick.com.tw

Thailand
Phone +66 2645 0009
E-Mail Ronnie.Lim@sick.com

Turkey
Phone +90 216 528 50 00
E-Mail info@sick.com.tr

United Arab Emirates
Phone +971 4 88 65 878
E-Mail info@sick.ae

United Kingdom
Phone +44 1727 831121
E-Mail info@sick.co.uk

USA
Phone +1 800 325 7425
E-Mail info@sick.com

Vietnam
Phone +84 945452999
E-Mail Ngo.Duy.Linh@sick.com

Further locations at **www.sick.com**