OPERATING INSTRUCTIONS

Lector64x/Lector65x

Image-based code reader

SICK
Sensor Intelligence.

Described product

Lector64x Flex

Lector65x Flex

Lector65x Dynamic Focus

Manufacturer

SICK AG
Erwin-Sick-Str. 1
79183 Waldkirch
Germany

Legal information

Original document

This document is an original document of SICK AG.

Contents

1 About this document

1.1 Information on the operating instructions

These operating instructions provide important information on how to use devices from SICK AG.

Prerequisites for safe work are:

- Compliance with all safety notes and handling instructions supplied.
- Compliance with local work safety regulations and general safety regulations for device applications

The operating instructions are intended to be used by qualified personnel and electrical specialists.

NOTE
Read these operating instructions carefully to familiarize yourself with the device and its functions before commencing any work.

The operating instructions are an integral part of the product. Store the instructions in the immediate vicinity of the device so they remain accessible to staff at all times. Should the device be passed on to a third party, these operating instructions should be handed over with it.

These operating instructions do not provide information on the handling and safe operation of the machine or system in which the device is integrated. Information on this can be found in the operating instructions for the machine or system.

1.2 Explanation of symbols

Warnings and important information in this document are labeled with symbols. Signal words introduce the instructions and indicate the extent of the hazard. To avoid accidents, damage, and personal injury, always comply with the instructions and act carefully.

DANGER
... indicates a situation of imminent danger, which will lead to a fatality or serious injuries if not prevented.

WARNING
... indicates a potentially dangerous situation, which may lead to a fatality or serious injuries if not prevented.

CAUTION
... indicates a potentially dangerous situation, which may lead to minor/slight injuries if not prevented.

NOTICE
... indicates a potentially harmful situation, which may lead to material damage if not prevented.

NOTE
... highlights useful tips and recommendations as well as information for efficient and trouble-free operation.

1.3 Related applicable documents

Related applicable documents from SICK

Document	Title	Part number	Source
Technical information	VI83I-xxxxxxMx illumination unit	8017270	www.sick.com/8017270

1.4 Further information

More information can be found on the product page.

The product page can be accessed via the **SICK Product ID: pid.sick.com/{P/N}/{S/N}**

{P/N} corresponds to the part number of the product, see type label.

{S/N} corresponds to the serial number of the product, see type label (if indicated).

The following information is available depending on the product:

- Data sheets
- This document in all available language versions
- CAD files and dimensional drawings
- Certificates (e.g., declaration of conformity)
- Other publications
- Software
- Accessories

2 Safety information

2.1 Intended use

The Lector64x/Lector65x image-based code reader is an intelligent SICK-4Dpro sensor.

The product is used for automatic, stationary identification and decoding of codes on moving or stationary objects. The product reads all commonly used 1D codes (barcodes, stacked codes) and 2D codes (matrix codes). In read mode, the product transmits the read results via the host interface to a higher-level computer (e.g., PLC) for further centralized processing.

Only the VI83I illumination units from SICK intended for integration in this application can be used as an illumination unit.

The product is designed for use in industrial and logistics areas, and meets the requirements for industrial ruggedness, interfaces and data processing.

Use products with type code V2D6xxx-xxxxxHx only in industrial environments (EN 61000-6-4).

Incorrect use, improper modification, or tampering with the product will invalidate any warranty offered by SICK AG. Furthermore, SICK AG shall not accept any responsibility or liability for any resulting damage and consequential damage.

2.2 Improper use

Any use outside of the stated areas, in particular use outside of the technical specifications and the requirements for intended use, will be deemed to be incorrect use.

- The device does not constitute a safety component in accordance with the respective applicable safety standards for machines.
- The device must not be used in explosion-hazardous areas, in corrosive environments or under extreme environmental conditions.
- The device must not be operated in the temperature range below 0 °C.
- Any use of accessories not specifically approved by SICK AG is at your own risk.

WARNING
Danger due to improper use!

Any improper use can result in dangerous situations.

Therefore, observe the following information:

- Product should be used only in accordance with its intended use.
- All information in the documentation must be strictly observed.
- Shut down the product immediately in case of damage.

2.3 Cybersecurity

Overview

To protect against cybersecurity threats, it is necessary to continuously monitor and maintain a comprehensive cybersecurity concept. A suitable concept consists of organizational, technical, procedural, electronic, and physical levels of defense and considers suitable measures for different types of risks. The measures implemented in this product can only support protection against cybersecurity threats if the product is used as part of such a concept.

You will find further information at www.sick.com/psirt, e.g.:

- General information on cybersecurity
- Contact option for reporting vulnerabilities
- Information on known vulnerabilities (security advisories)

2.4 Limitation of liability

Relevant standards and regulations, the latest technological developments, and our many years of knowledge and experience have all been taken into account when compiling the data and information contained in these operating instructions. The manufacturer accepts no liability for damage caused by:

- Non-adherence to the product documentation (e.g., operating instructions)
- Incorrect use
- Use of untrained staff
- Unauthorized conversions or repair
- Technical modifications
- Use of unauthorized spare parts, consumables, and accessories

2.5 Modifications and conversions

NOTICE
Modifications and conversions to the device may result in unforeseeable dangers.

Interrupting or modifying the device or SICK software will invalidate any warranty claims against SICK AG. This applies in particular to opening the housing, even as part of mounting and electrical installation.

2.6 Requirements for skilled persons and operating personnel

WARNING
Risk of injury due to insufficient training.
Improper handling of the device may result in considerable personal injury and material damage.

- All work must only ever be carried out by the stipulated persons.

The following qualifications are required for various activities:

Table 1: Activities and technical requirements

Activities	Qualification
Mounting, maintenance	▪ Basic practical technical training ▪ Knowledge of the current safety regulations in the workplace
Electrical installation, device replacement	▪ Practical electrical training ▪ Knowledge of current electrical safety regulations ▪ Knowledge of the operation and control of the devices in their particular application
Commissioning, configuration	▪ Basic knowledge of the computer operating system used ▪ Basic knowledge of the design and setup of the described connections and interfaces ▪ Basic knowledge of data transmission ▪ Basic knowledge of 1D technology (bar code) or 2D technology (matrix code)

Activities	Qualification
Operation of the device for the particular application	▪ Knowledge of the operation and control of the devices in their particular application ▪ Knowledge of the software and hardware environment for the particular application

2.7 Operational safety and specific hazards

Please observe the safety notes and the warnings listed here and in other sections of this product documentation to reduce the possibility of risks to health and avoid dangerous situations.

Danger due to visible radiation is product-specific. See the technical data for more information.

CAUTION
Optical radiation: LED risk group 1, visible radiation, 400 nm to 780 nm

The LEDs may pose a danger to the eyes in the event of incorrect use.

- Do not look into the light source intentionally.
- Do not open the housing. Opening the housing will not switch off the light source. Opening the housing may increase the level of risk.
- Comply with the current national regulations on photobiological security of lamps and lamp systems.

CAUTION
Warning! Optical radiation: LED risk group 2, visible radiation, 400 nm to 780 nm

Potentially dangerous optical radiation. Can be damaging to the eyes.

- Do not look into the light source for extended periods of time.
- Never point the light source at people.
- Avoid any reflections on people from reflective surfaces. Be particularly careful during mounting and alignment work.
- Do not open the housing. Opening the housing will not switch off the light source. Opening the housing may increase the level of risk.
- Comply with the current national regulations on photobiological security of lamps and lamp systems.

If the product is operated in conjunction with external illumination units, the risks described here may be exceeded. This must be taken into consideration by users on a case-by-case basis.

CAUTION
Optical radiation: Class 1 Laser Product

The accessible radiation does not pose a danger when viewed directly for up to 100 seconds. It may pose a danger to the eyes and skin in the event of incorrect use.

- Do not open the housing. Opening the housing may increase the level of risk.
- Current national regulations regarding laser protection must be observed.

Caution – Use of controls or adjustments or performance of procedures other than those specified herein may result in hazardous radiation exposure.

For both radiation types:

It is not possible to entirely rule out temporary disorienting optical effects, particularly in conditions of dim lighting. Disorienting optical effects may come in the form of dazzle, flash blindness, afterimages, photosensitive epilepsy, or impairment of color vision, for example.

CAUTION

Risk of injury due to hot device surface.

The surface of the device can become hot.

- Before performing work on the device (e.g. mounting, cleaning, disassembly), switch off the device and allow it to cool down.
- Ensure good dissipation of excess heat from the device to the surroundings.

WARNING

Electrical voltage!

Electrical voltage can cause severe injury or death.

- Work on electrical systems must only be performed by qualified electricians.
- The power supply must be disconnected when attaching and detaching electrical connections.
- The product must only be connected to a voltage supply as set out in the requirements in the operating instructions.
- National and regional regulations must be complied with.
- Safety requirements relating to work on electrical systems must be complied with.

WARNING

Risk of injury and damage caused by potential equalization currents!

Improper grounding can lead to dangerous equipotential bonding currents, which may in turn lead to dangerous voltages on metallic surfaces, such as the housing. Electrical voltage can cause severe injury or death.

- Work on electrical systems must only be performed by qualified electricians.
- Follow the notes in the operating instructions.
- Install the grounding for the product and the system in accordance with national and regional regulations.

2.8 UL conformity

The UL certification is dependent on the type. Any existing UL certification can be found on the type label.

NFPA79 applications only. Adapters including field wiring cables are available.

More information can be found on the product page:

The page can be accessed via the **SICK Product ID: pid.sick.com/{P/N}/{S/N}**

{P/N} corresponds to the part number of the product, see type label.

{S/N} corresponds to the serial number of the product, see type label (if indicated).

2.9 Warning labels on the product

Products and illumination units with LEDs in risk group RG 2 are provided with the following warning label.

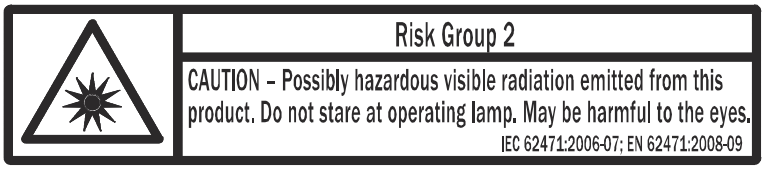

Figure 1: Risk Group 2: CAUTION - Possibly hazardous optical radiation emitted from this product. Do not look into the lamp during operation. This could damage your eyes. IEC 62471:2006-07; EN62471:2008-09

For the products, the label is located on the exterior of the housing. For the illumination units, the warning label is located on the outer ring.

The mounted optics protection hood covers the warning label on the illumination unit. The integrated illumination unit types in risk group RG 2 therefore contain an additional warning label for risk group RG 2.

Apply the additional warning label on the outside of the optics protection hood in a well visible location near the light emission. If the product itself is, for example, integrated into a machine in such a way that the attached warning label is obscured, attach further clearly visible labels to the machine close to where the light is emitted.

3 Product description

3.1 Product variants

Flex product variant

The Flex product variant is a camera housing with a C-mount thread. The product can be assembled from individual components to suit the particular application. The individual components can be ordered separately as accessories. Only certain lenses and illumination units are compatible depending on the product type. Use only products from SICK.

Dynamic Focus product variant

The Dynamic Focus product variant is a complete device. The product is already equipped with a pre-assembled lens and a pre-assembled integrated illumination unit.

3.2 Scope of delivery

Product

Table 2: Scope of delivery of the product

No. of units	Component	Remarks
1	Product in the ordered type (complete device or basic device)	**Complete device:** • Components are assembled at the factory (camera housing and optics accessories). • Optics protection hood is provided with a seal. **Basic device:** • Mount camera housing with C-mount threaded connection and individual components on your own. • Order individual components separately as accessories. • Light inlet is sealed with a protective cap. **All products:** • Electrical connections are sealed with protective caps. • Without holders and connecting cables
2	Sliding nut, 5.5 mm deep, with M5 threaded fixing hole	• Alternative mounting option for the product instead of the threaded mounting hole • Use in pairs.
1	Hexagon key WAF 2	• Basic device: mount integratable VI83I illumination. • Open and close foldable cover (access to the microSD card slot).
1 or 2	LED warning label RG 2 (self-adhesive)	• Complete device: 1 LED warning label (French) for integrated RG 2 ring illumination unit included with delivery of the product. • Basic device: 2 LED warning labels in English and French included in the scope of delivery of the separately-ordered integratable ring illumination unit RG 2.
1	Laser warning label (self-adhesive)	Basic device: laser warning label (French) for the laser output aperture in the camera housing
1	SICK lens cloth	Basic device: clean optical surfaces (e.g. front screen in the optics protection hood).

No. of units	Component	Remarks
1	Printed safety notes, multilingual	Brief information and general safety notes

The actual scope of delivery may differ for special designs, additional orders or due to the latest technical changes.

Optic kit

The optic kit is an optional accessory that can be ordered for the basic unit (Flex product variant).

Table 3: Optic kit scope of delivery

No. of units	Component	Note
1	Lens	Application-specific
1	Integratable illumination unit (VI83I ring illumination unit)	Application-specific Luminous field appropriate for focal distance of lens
2	Spacer	One with a plated-through connection for the electrical connection
4	M2, 5 x 6 mm	Hexagon cylinder head, size 2
4	M2, 5 x 12 mm	Hexagon cylinder head, size 2
1	Protective cover for optics	IP65 With screw thread and viewing window

3.3 Product ID

3.3.1 Type label

The type label contains information for identifying the product.

The UL certification is dependent on the type. Any existing UL certification can be found on the type label. The corresponding UL logo is then printed on the label.

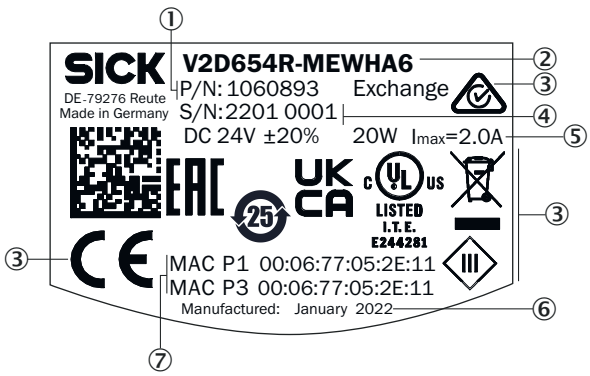

① Part number
② Type designation according to type code
③ Conformity mark and certification mark
④ Serial number
⑤ Supply voltage, power consumption, current consumption
⑥ MAC addresses
⑦ Date of manufacture

3.3.2 Type code

Type code structure

V2D a b c d – e f g h i j k

Position	Description	Characteristic
a	Product family	6: series 6xx
b	Platform, housing	4: Advanced Line small 5: Advanced Line
c	Resolution of the image sensor	2: 2 megapixels (2048 px x 1088 px) • Lector642: 1.7 megapixel (1,600 px x 1,088 px) • Lector652: 2.1 megapixel (2,048 px x 1,088 px) 4: 4.2 megapixels (2,048 px x 2,048 px)
d	Function	R: Read, standard decoder (1D, 2D) D: Read, standard decoder (1D, 2D), DPM decoder, OCR decoder
e	generation	“Empty”: 1. Generation
f	Image sensor type, color	M: Monochrome (black-and-white)
g	Optics/Focusing system	C: C-mount thread E: Electrical focus (dynamic, auto, teach-auto)
h	Color of the illumination Possible aperture angle: narrow, wide, medium	X: without illumination unit R: Red/Amber W: White B: Blue
i	Focal distance (lens unit)	X: No lens installed H: 54 mm K: 40 mm
j	Connection variant [1]	A: USB; CAN, serial, IO; Enet 1; Enet 2 (connection variant 1, stand-alone solution) F: CAN IN, IO; CAN OUT, IO; Enet 1; Enet 2; illumination unit (connection variant 2, for system) H: USB; CAN, serial, IO; Enet 1; Enet 2:Fieldbus IN - PROFINET; Enet 3:Fieldbus OUT - PROFINET (connection variant 3, with Dual Port PROFINET)
k	IP protection class and viewing window	5: IP65, plastic viewing window 6: IP65, glass viewing window

[1] see "Connections and pin assignment", page 30

3.4 Product overview

Product overview

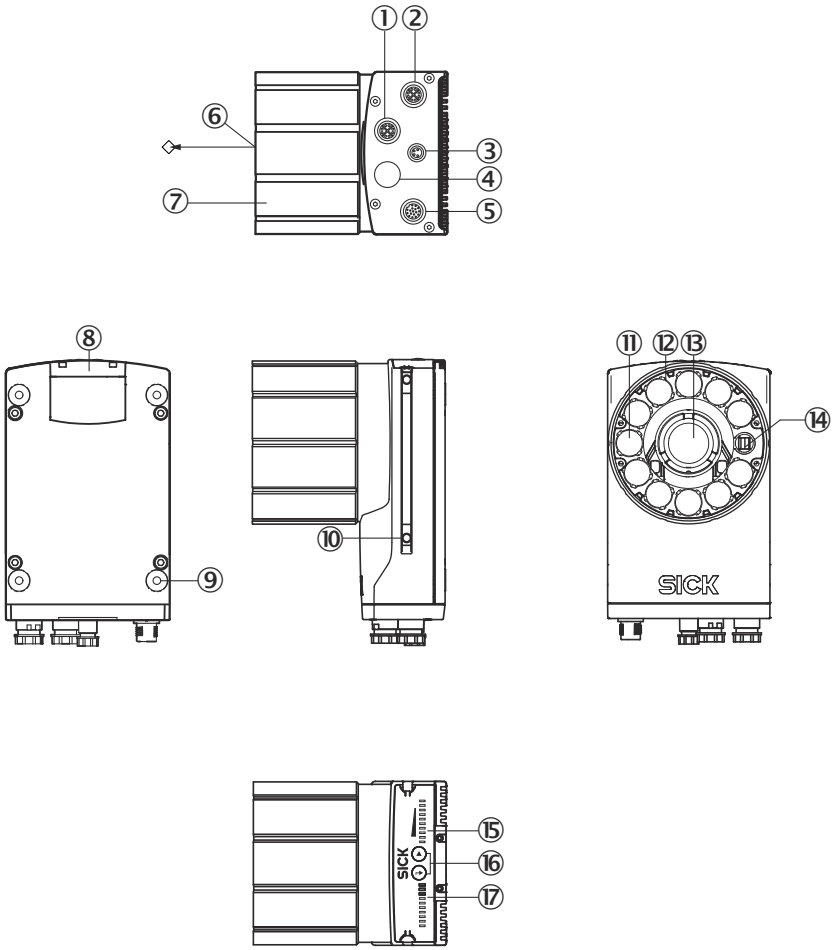

① Connection P1, function and design dependent on type
② Connection P3, function and design dependent on type
③ Connection X2, function and design dependent on type
④ Connection P2, function and design dependent on type
⑤ Connection X1, function and design dependent on type
⑥ Reference point for working distance from product to object
⑦ Protective cover for optics
⑧ Cover at the rear of the device, access to the microSD memory card
⑨ 4 threaded mounting holes, M5: blind tapped hole; 5.5 mm deep; max. depth of thread 5 mm
⑩
⑪ Feedback LED: visible green light
⑫ VI83I illumination unit (11 LEDs)
⑬ Lens
⑭ Outlet opening for light beam from laser alignment aid
⑮ 10 bar graph LEDs
⑯ 2 function keys
⑰ 10 status LEDs (2 levels)

Further topics

- Dimensional drawing

3.5 Integrated illumination unit

Overview

The Dynamic Focus product variant has an integrated illumination unit. With the Flex product variant, the illumination unit can be ordered separately and mounted on its own.

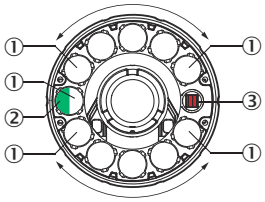

Figure 2: VI83I illumination unit

① Illumination unit = 11 LEDs

② 1 feedback-LED (color: visible green light, e.g. for Good Read)

③ 1 opening for the laser alignment aids for aligning the product (color: visible red light)

Feedback LED

The function of the feedback LED can be set using SOPAS ET. With the default settings, for example, the green feedback LED briefly produces a green feedback spot within the field of view of the product after a successful read.

Laser alignment aid

The laser alignment aid produces a red spot (laser spot) in the field of view of the product. The alignment aid can be switched off.

3.6 Display and control elements

Overview

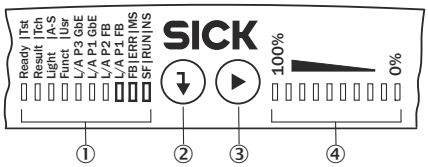

Figure 3: Status LEDs, bar graph and function keys

① Status LEDs

② Return pushbutton

③ Arrow pushbutton

④ Bar graph display

Status indicators on the first display level

Display	LED	Color	Status
Ready	●	Green	Product is ready for operation
	●	Red	Hardware or software error
Result	●	Green	Read is successful
	●	Red	Read is unsuccessful
Light	●	Green	Operation: Illumination on, internal trigger active

● = illuminated; ☀ = flashing

PROFINET operation (single port)

The **Ready** status LED signals the product status in the PROFINET network.

Table 4: LEDs in PROFINET operation (single port)

Ready LED		Product status	Remarks
Green components	Red components		
●	○	The product is ready for operation.	
●	☀ Flashes every 7 seconds.	Network detection in the product is active.	The duration of network detection can be configured in SOPAS ET (default: 3 minutes).
●	☀ Flashes every 0.5 seconds.	PROFINET is activated in the product. The product is not connected to the PROFINET IO controller (PLC) or the product is not configured.	To not use PROFINET, deactivate PROFINET. In the default configuration of the product, automatic PROFINET network detection is activated. This detects during startup whether the product is in a PROFINET environment and activates PROFINET automatically. To prevent this, deactivate PROFINET network detection or set the product name or IP address different from the default. To apply the changed settings, permanently save the changes and restart the product.
☀	☀	The **flashing** function is activated via the configuration software.	The red and green components of the LED flash alternately. Prerequisite: PROFINET is activated in the product.

● = lights up; ☀ = flashes; ○ = does not light up

Status indicators on the second display level

Display	LED	Color	Status
Tst (Test)	●	Blue	Test (reading diagnostics) selected
	☀	Blue	Test started
Tch (Teach-in)	●	Blue	Teach-in selected (default: Match code)
	☀	Blue	Teach-in started
	●	Green	Teach-in successful
	●	Red	Teach-in unsuccessful Match code default setting: unable to teach in code
A-S (Auto-Setup)	●	Blue	Set-up selected
	☀	Blue	Set-up started
	●	Green	Set-up successfully quit
	●	Yellow	Set-up partially successful, in at least one of the 3 parameter modules
	●	Red	Setup unsuccessful

Display	LED	Color	Status
Usr (User)	●	Green	Function can be defined by user
	●	Yellow	Function can be defined by user
	●	Blue	Function can be defined by user
	●	Red	Function can be defined by user

● = illuminated; ☀ = flashing

Functions

Table 5: Function overview

Function	Description
Test (read diagnostics)	Percentage analysis: The product records a series of images and uses the current reading performance settings to decode them. With the 0 ... 100% bar graph, the product shows the read rate of the last 10% (90% to 100%). The bar graph display is activated in standard read mode.
Teach	Teaching in a match code: the product reads the code that is presented and saves the code permanently as a target code for future code comparisons during read mode. For Pharmacodes, the **Code type & code length** function must first be defined in SOPAS ET.
Auto-Setup	The product adjusts itself automatically to suit the lighting conditions, working distance [1], and quality of the code presented. The product permanently stores the acquired values as per the default setting.

[1] Only applies for Dynamic Focus.

4 Transport and storage

4.1 Transport

NOTICE
Damage due to improper transport!

- The product must be packaged with protection against shock and damp.
- Recommendation: Use the original packaging.
- Note the symbols on the packaging.
- Do not remove packaging until immediately before you start mounting.

4.2 Unpacking

- To protect the device against condensation, allow it to equilibrate with the ambient temperature before unpacking if necessary.
- Handle the device with care and protect it from mechanical damage.
- To avoid ingress of dust and water, only remove the protective elements, e.g. protective caps of the electrical connections just before attaching the connecting cable.

4.3 Transport inspection

Immediately upon receipt in Goods-in, check the delivery for completeness and for any damage that may have occurred in transit. In the case of transit damage that is visible externally, proceed as follows:

- Do not accept the delivery or only do so conditionally.
- Note the scope of damage on the transport documents or on the transport company's delivery note.
- File a complaint.

NOTE
Complaints regarding defects should be filed as soon as these are detected. Damage claims are only valid before the applicable complaint deadlines.

4.4 Storage

- Electrical connections are provided with a protective cap.
- Do not store outdoors.
- Store in a place protected from moisture and dust.
- Recommendation: Use the original packaging.
- To allow any residual dampness to evaporate, do not package in airtight containers.
- Do not expose to any aggressive substances.
- Protect from sunlight.
- Avoid mechanical shocks.
- Storage temperature: see "Technical data", page 54.
- Relative humidity: see "Technical data", page 54.
- For storage periods of longer than 3 months, check the general condition of all components and packaging on a regular basis.

5 Mounting

5.1 Mounting instructions

- Observe the technical data.
- Protect the sensor from direct and indirect sunlight.
- To prevent condensation, avoid exposing the device to rapid changes in temperature.
- The mounting site has to be designed for the weight of the device.
- Mount the product in a shock and vibration insulated manner.
- In application areas with severe vibrations or shocks caused by vibrations, jolts or abrupt changes in directions (e.g., when mounted to a manned forklift truck), mounting with vibration dampers is to be carried out. Mount the device in a freely suspended manner.
- Ensure a good dissipation of excess heat from the device to the surroundings, in particular at higher ambient temperatures. Good heat transfer from the device can be achieved, for example, by using a bracket on the mounting base or by ensuring that the back of the device is located at a sufficient distance from the wall of an enclosure.
- Make sure the device has a clear view of the codes.

5.2 Mounting location

5.2.1 Work area

Working range

Depending on the product type, the working range is between 50 mm and 2,200 mm.

Working distance and field of view size

The field of view size is determined by the focus position, the focal length of the lens, and the working distance. The necessary working distance can be determined from the field of view diagram, see "Field of view diagrams", page 60.

Focus setting

- Dynamic Focus product variant: You can use the **Auto Setup** function to automatically set the focus position to the working distance.
- Flex product variant: The focus position can be adjusted manually on the lens.

The focus position is valid for one working distance. The product does not perform automatic tracking (auto focus) if, for example, the working distance changes significantly.

5.2.2 Mounting angle and reflection prevention

In order to avoid reflections from the surfaces to be scanned, mount the product so that it is tilted from the perpendicular to the surface.

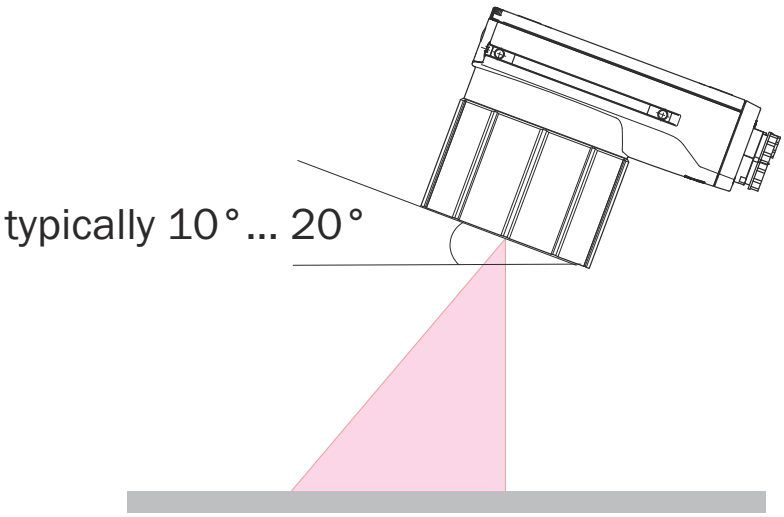

Figure 4: Mounting angle to use, depending on the application

① Typical angle 10° ... 20°

Depending on the application, an angle of 0° (brightfield illumination) or up to 45° (darkfield illumination) is appropriate.

5.3 Mounting the lens and illumination

Overview

This mounting step is only required for the Flex product variant (basic device).

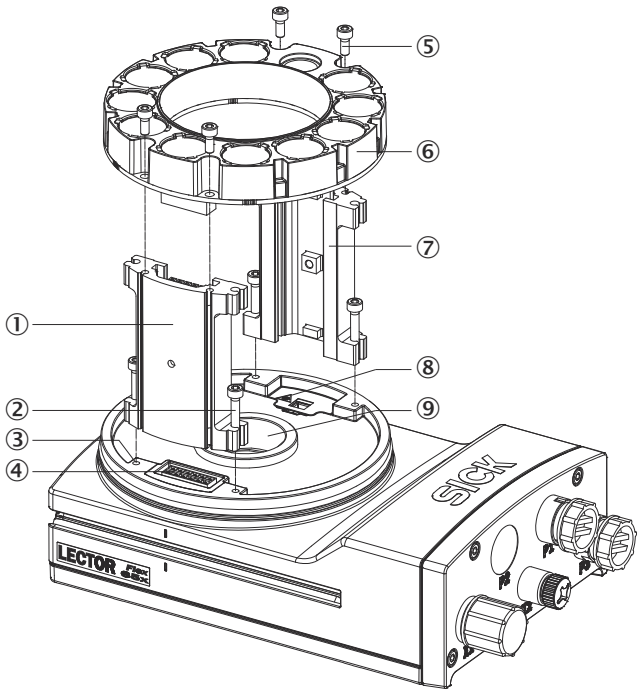

① Spacer, left with electrical connection
② 4 tapped blind holes, M2.5, 5.5 mm deep, for mounting the spacer
③ 4 x screws, long
④ Electrical connection for integratable ring illumination unit
⑤ 4 screws, short
⑥ Integratable ring illumination unit
⑦ Spacer, right
⑧ Laser warning shield of the laser output aperture
⑨ Light inlet with threaded connection for lens

Important information

NOTICE
Risk of damage due to electrostatic discharge

Electrostatic discharge from the human body may damage parts of the illumination unit or the camera housing.

The illumination variants for lenses with a focal length of 12 mm or 16 mm do not feature any plastic lenses in front of the LEDs in the round recesses.

- Take the necessary ESD precautions when assembling the product.
- Do not insert your fingers into the recesses.
- Do not touch the open contacts of the electrical connection for the illumination unit on the camera housing.

NOTE
Possible impairment of image quality

Dust and fingerprints on optical boundary surfaces can decrease the image quality and decoding performance of the product.

- ► Ensure a dust-free and dry environment when mounting components.
- ► Do not touch the image sensor (CMOS) in the light inlet opening of the product with your fingers.
- ► Do not touch the glass lenses at either end of the lens unit with your fingers.

Prerequisites

- Lens and illumination unit are compatible with the product.
  You can find compatible accessories on the product page,
  which can be accessed via the SICK Product ID: pid.sick.com/{P/N}
  {P/N} corresponds to the part number of the product (see type label).
  {S/N} corresponds to the serial number of the product (see type label).
- SW 2 hex key (included with delivery)
- SW 5 socket wrench, recommendation: as a torque wrench for 65 Ncm

Approach

1. Switch on the supply voltage for the product.
2. Peel off the white protective sticker on the camera housing that covers the electrical connection for the illumination unit.
3. Place the camera housing on a nonslip base.
4. If required for the country in question, stick the French laser warning label supplied over the English laser warning label in the camera housing. Make sure to stick the label exactly over the other one. For safety reasons, the English laser warning label must not be removed.
5. Remove the protective cap from the round light inlet.
6. Carefully insert the optional filter and spacer disk into the light inlet.
7. Screw the lens unit into the C-mount thread until it engages. This will also lock the optional filter in place at the same time.
8. Take two pairs of long screws and screw them into the tapped blind holes to mount each spacer to the correct side of the camera housing.
9. Use the 4 short screws to fasten the illumination unit to the two spacers.
10. Manually preset the sharpness and aperture of the lens unit.
11. Switch on the product.
12. Check the setting of SOPAS ET.
13. If the required adjustments to the lens are not carried out immediately, mount the optics protection hood for the lens.
14. For illumination unit variants with LEDs of risk group RG 2: attach the appropriate country-specific warning label near the light emission point on the outside of the optics protection hood.

Further topics

- Warning labels on the product

5.4 Assembling the product

Approach

1. If required for the country in question, stick the French warning label supplied over the English warning label for LED risk group RG 2.
2. Mount the product on suitably prepared mounting equipment using M5 screws and by means of the provided threaded mounting holes or sliding nuts.
   - Screw the screws no more than 5 mm into the threaded mounting holes or sliding nuts.
   - To do so, either use all 4 threaded mounting holes on the rear of the product or the two sliding nuts on the side of the product.
   - Attach the optional SICK mounting equipment ordered separately using the sliding nuts on the product.
3. Align the product taking into consideration the field of view and the application circumstances.

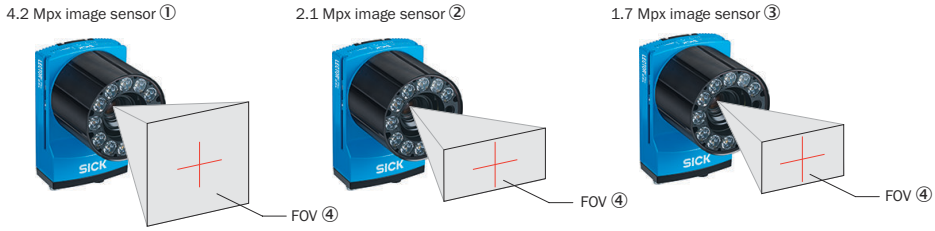

Figure 5: Resolution-dependent field of view geometries

① Lector654 with image sensor 4.2 Mpx
② Lector652 with image sensor 2.1 Mpx
③ Lector642 with image sensor 1.7 Mpx
④ Field of view

4. Connect the product to interfaces and supply voltage when disconnected from voltage.

✓ The **Ready** status LED lights up green.

5. Perform fine adjustment.

Further topics

- Mounting instructions
- Field of view diagrams
- Mounting systems are available as accessories: Accessories
- Connecting

6 Electrical installation

6.1 Wiring instructions

NOTE
Pre-assembled cables can be found on the product page.
The product page can be accessed via the **SICK Product ID: pid.sick.com/{P/N}/{S/N}**
{P/N} corresponds to the part number of the product, see type label.
{S/N} corresponds to the serial number of the product, see type label (if indicated).

NOTICE
Faults during operation and defects in the device or the system
Incorrect wiring may result in operational faults and defects.

- Follow the wiring notes precisely.

All electrical connections of the device are configured as round connectors.

The enclosure rating stated in the technical data is achieved only with screwed plug connectors or protective caps.

Configure the circuits connected to the device as ES1 circuits or as SELV circuits (SELV = Safety Extra Low Voltage). The voltage source must meet the requirements of ES1 and PS2 (EN 62368-1) or SELV and LPS (EN 60950-1).

Protect the device with an external slow-blow fuse at the beginning of the supply cable.

Connect the connecting cables in a de-energized state. Do not switch on the supply voltage until installation is complete and all connecting cables are connected to the device and control.

Wire cross-sections in the supply cable from the customer's power system must be implemented in accordance with the applicable standards.

In the case of open end cables, make sure that bare wire ends do not touch. Wires must be appropriately insulated from each other.

6.1.1 Data cables

Important information

NOTE
Layout of data cables

- Use screened data cables with twisted-pair wires.
- Implement the screening design correctly and completely.
- To avoid interference, always use EMC-compliant cables and layouts. This applies, for example, to cables for switched-mode power supplies, motors, clocked drives, and contactors.
- Do not lay cables over long distances in parallel with power supply cables and motor cables in cable channels.

Length of cable and data transmission rate

The maximum length of cable between device and, for example, host computer depends on the interface type and the data transmission rate.

Further topics

- For information on data transmission rates and lengths of cable: Wiring the data interface

6.2 Prerequisites for safe operation of the device

WARNING

Risk of injury and damage caused by electrical current!

As a result of equipotential bonding currents between the device and other grounded devices in the system, faulty grounding of the device can give rise to the following dangers and faults:

- Dangerous voltages are applied to the metal housings.
- Devices will behave incorrectly or be destroyed.
- Cable shielding will be damaged by overheating and cause cable fires.

Remedial measures

- Only skilled electricians should be permitted to carry out work on the electrical system.
- If the cable insulation is damaged, disconnect the voltage supply immediately and have the damage repaired.
- Ensure that the ground potential is the same at all grounding points.
- Where local conditions do not meet the requirements for a safe earthing method, take appropriate measures. For example, ensure low-impedance and current-carrying equipotential bonding.

The device is connected to the peripheral devices (any local trigger sensor(s), system controller) via shielded cables. The cable shield – for the data cable, for example – rests against the metal housing of the device.

The device can be grounded through the cable shield or through a blind tapped hole in the housing, for example.

If the peripheral devices have metal housings and the cable shields are also in contact with their housings, it is assumed that all devices involved in the installation have the **same ground potential**.

This is achieved by complying with the following conditions:

- Mounting the devices on conductive metal surfaces
- Correctly grounding the devices and metal surfaces in the system
- If necessary: low-impedance and current-carrying equipotential bonding between areas with different ground potentials

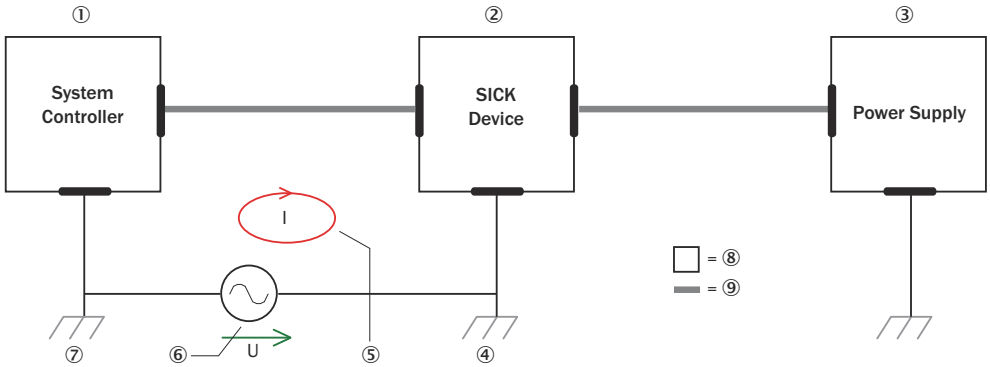

Figure 6: Example: Occurrence of equipotential bonding currents in the system configuration

① System controller
② Device
③ Voltage supply
④ Grounding point 2
⑤ Closed current loop with equalizing currents via cable shield
⑥ Ground potential difference
⑦ Grounding point 1
⑧ Metal housing
⑨ Shielded electrical cable

If these conditions are not fulfilled, equipotential bonding currents can flow along the cable shielding between the devices due to differing ground potentials and cause the hazards specified. This is, for example, possible in cases where there are devices within a widely distributed system covering several buildings.

Remedial measures

The most common solution to prevent equipotential bonding currents on cable shields is to ensure low-impedance and current-carrying equipotential bonding. If this equipotential bonding is not possible, the following solution approaches serve as a suggestion.

NOTICE
We expressly advise against opening up the cable shields. This would mean that the EMC limit values can no longer be complied with and that the safe operation of the device data interfaces can no longer be guaranteed.

Measures for widely distributed system installations

On widely distributed system installations with correspondingly large potential differences, the setting up of local islands and connecting them using commercially available **electro-optical signal isolators** is recommended. This measure achieves a high degree of resistance to electromagnetic interference.

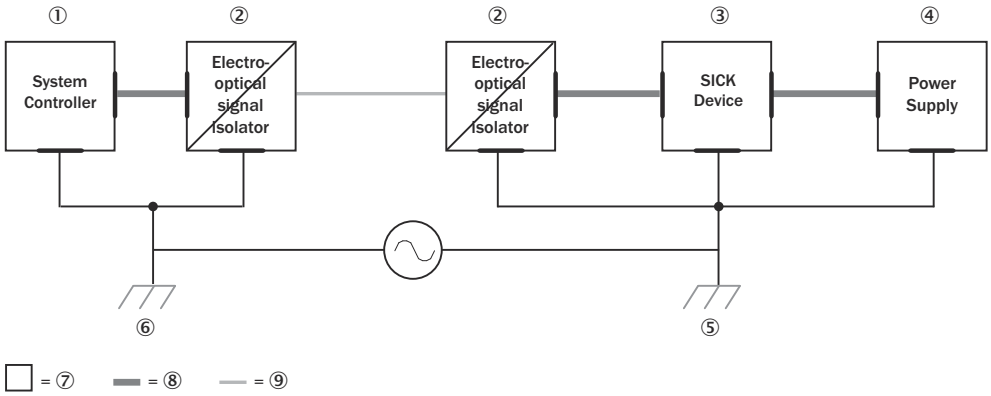

Figure 7: Example: Prevention of equipotential bonding currents in the system configuration by the use of electro-optical signal isolators

① System controller
② Electro-optical signal isolator
③ Device
④ Voltage supply
⑤ Grounding point 2
⑥ Grounding point 1
⑦ Metal housing
⑧ Shielded electrical cable
⑨ Optical fiber

The use of electro-optical signal isolators between the islands isolates the ground loop. Within the islands, a stable equipotential bonding prevents equalizing currents on the cable shields.

Measures for small system installations

For smaller installations with only slight potential differences, insulated mounting of the device and peripheral devices may be an adequate solution.

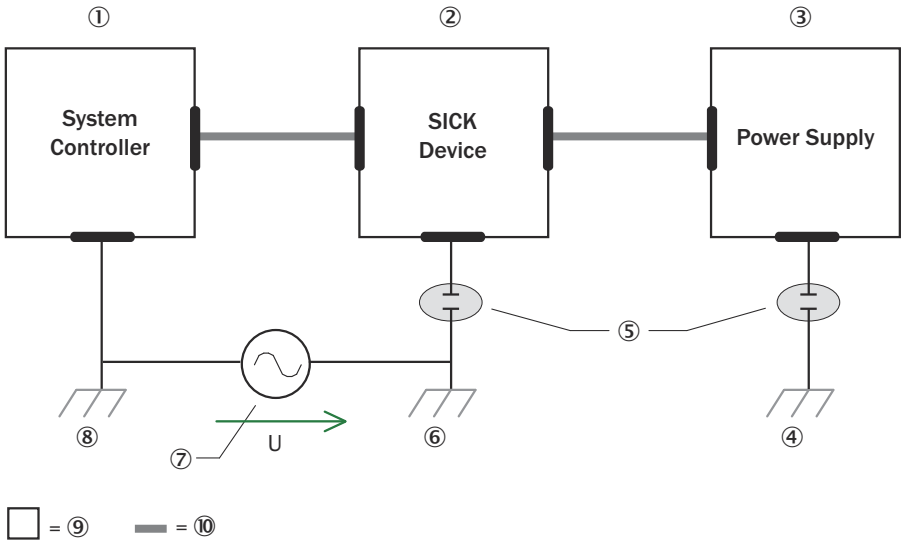

Figure 8: Example: Prevention of equipotential bonding currents in the system configuration by the insulated mounting of the device

① System controller
② Device
③ Voltage supply
④ Grounding point 3
⑤ Insulated mounting
⑥ Grounding point 2
⑦ Ground potential difference
⑧ Grounding point 1
⑨ Metal housing
⑩ Shielded electrical cable

Even in the event of large differences in the ground potential, ground loops are effectively prevented. As a result, equalizing currents can no longer flow via the cable shields and metal housing.

NOTICE

The voltage supply for the device and the connected peripheral devices must also guarantee the required level of insulation.

Under certain circumstances, a tangible potential can develop between the insulated metal housings and the local ground potential.

6.3 Connection principle

Connection with CDB650-204 connection module

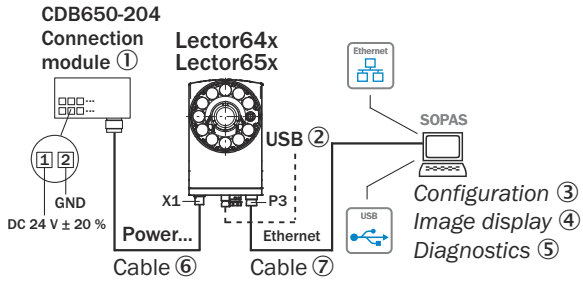

Figure 9: Only valid for connection variant 1. Connection variants for Systems and DualPort are not entirely taken into account in this view.

① CDB650-204 connection module

② Alternative USB cable: male connector, M8, 4-pin/male connector, USB-A, 4-pin

③ Configuration

④ Image display

⑤ Diagnostics

⑥ Cable: male connector, M12, 17-pin, A-coded/female connector, M12, 17-pin, A-coded

⑦ Cable: male connector, M12, 8-pin, X-coded/male connector, RJ45, 8-pin

Wiring without SICK connection module

When using customer-specific connection units, the wiring principle for the signals can be found in the connection diagrams for the CDM420-0006 connection module, see "Connection of the device to CDM420-0006", page 78.

6.4 Connections and pin assignment

Overview

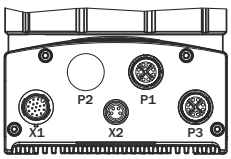

Table 6: Connection overview

Connection	V2D6xxR-MCxxAx connection variant 1 (stand-alone solution)	V2D6xxR-MCxxFx connection variant 2 (for systems)	V2D6xxR-MCxxHx connection variant 3 (with Dual Port PROFINET)
X1	Power/SerialData/CAN/IO	CAN IN	Power/SerialData/CAN/IO
X2	USB	Triggering of external illumination	USB
P1	Gigabit Ethernet	Gigabit Ethernet	Ethernet (100 Mbit/s)
P2	–	CAN OUT	Ethernet (100 Mbit/s)
P3	Gigabit Ethernet	Gigabit Ethernet	Gigabit Ethernet

Power/SerialData/CAN/IO

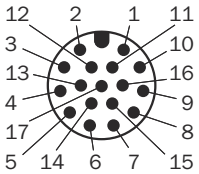

Figure 10: Male connector, M12, 17-pin, A-coded

Table 7: Pin assignment for Power/SerialData/CAN/IO

Pin	Signal	Description
1	GND	Supply voltage: 0 V
2	V_S	Supply voltage: DC 24 V ± 20%
3	CAN L	CAN-Bus LOW (IN/OUT)
4	CAN H	CAN-Bus HIGH (IN/OUT)
5	TD+ (RS-422), Host	Host interface (sender+)
6	TD- (RS-422), Host TxD (RS-232), host	Host interface (sender-)
7	TxD (RS-232), AUX	AUX interface (sender)
8	RxD (RS-232), AUX	AUX interface (receiver)
9	SensGND	Digital input ground
10	Sensor 1	Digital input 1
11	RD+ (RS-422) Host	Host interface (receiver+)
12	RD- (RS-422), host RxD (RS-232), host	Host interface (receiver–)
13	Result 1	Digital output 1
14	Result 2	Digital output 2
15	Sensor 2	Digital input 2
16	Result 3	Digital output 3
17	Result 4	Digital output 4

CAN IN

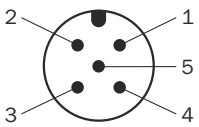

Figure 11: Male connector, M12, 5-pin, A-coded

Table 8: Pin assignment for CAN IN

Pin	Signal	Description
1	–	Shielding
2	V_S	Supply voltage: DC 24 V ± 20%
3	GND	Supply voltage: 0 V
4	CAN H	CAN-Bus HIGH (IN/OUT)
5	CAN L	CAN-Bus LOW (IN/OUT)

CAN OUT

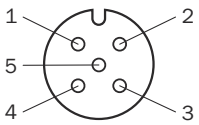

Figure 12: M12 female connector, 5-pin, A-coded

Table 9: Pin assignment for CAN OUT

Pin	Signal	Description
1	–	Shielding
2	V_S	Supply voltage: DC 24 V ± 20%
3	GND	Supply voltage: 0 V
4	CAN H	CAN-Bus HIGH (IN/OUT)
5	CAN L	CAN-Bus LOW (IN/OUT)

USB

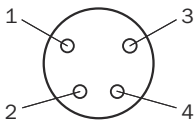

Figure 13: Female connector M8, 4-pin

Table 10: Pin assignment for USB

Pin	Signal	Description
1	D-	Data-
2	V_{USB}	USB voltage: DC 5 V
3	D+	Data+
4	GND	Supply voltage: 0 V

Triggering of external illumination

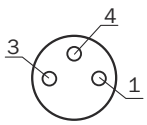

Figure 14: Female connector M8, 3-pin

Table 11: Pin assignment for triggering of external illumination unit

Pin	Signal	Description
1	Sensor 1	Digital input 1
2	–	–
3	Result 4	Digital output 4
4	SensGND	Digital input ground

Gigabit Ethernet

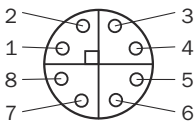

Figure 15: Female connector, M12, 8-pin, X-coded

Table 12: Pin assignment for Gigabit Ethernet

Pin	Signal	Description
1	TRD0_P	Sender+/receiver+ 0
2	TRD0_N	Sender–/receiver– 0
3	TRD1_P	Sender+/Receiver+ 1
4	TRD1_N	Sender–/Receiver– 1
5	TRD3_P	Sender+/Receiver+ 3
6	TRD3_N	Sender–/Receiver– 3
7	TRD2_P	Sender+/Receiver+ 2

Pin	Signal	Description
8	TRD2_N	Sender–/Receiver– 2

Ethernet

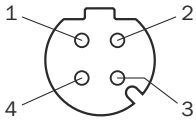

Figure 16: M12 female connector, 4-pin, D-coded

Table 13: Pin assignment for Ethernet

Pin	Signal	Description
1	TX+	Sender+
2	RX+	Receiver+
3	TX-	Sender-
4	RX-	Receiver-

6.5 Connecting

6.5.1 Using CDB and CDM connection modules

Table 14: Possible combinations of device and connection modules

Connection on the device	Connection modules	Connection cable
Male connector, M12, 17-pin, A-coded	CDB650-204	Cable 1:1 [1]
	CDM420-0006 [2]	Adapter cable [3]

[1] Connection cable 1:1 (female connector, M12, 17-pin, A-coded / male connector, M12, 17-pin, A-coded).
[2] CDM420-0007: for connecting 2 devices.
[3] Adapter cable (female connector, M12, 17-pin, A-coded / male connector, D-Sub-HD, 15-pin).

Connecting device with connection module

Connection modules	Reference
CDB650-204	see "Connection of the device to CDB650-204", page 64
CDM420-0006	see "Connection of the device to CDM420-0006", page 78

NOTE
The operating instructions of the connection modules contains detailed information on mounting and electrical installation. The operating instructions are available as a download on the product page of the connection module.

Connection module product page
- www.sick.com/CDB
- www.sick.com/CDM

6.5.2 Connecting the supply voltage

The voltage source meets the requirements of ES1 and PS2 (EN 62368-1) or SELV and LPS (EN 60950-1).

Table 15: Required supply voltage V_S and power output

Supply voltage V_S	Power source: required power output [1]
DC 24 V ± 20%	At least 30 W

[1] Valid for device with 4 loaded digital outputs (each 100 mA).

When connecting via the optional CDB or CDM connection module: if the CMC600 cloning module is used, an additional output power of 0.5 W is required.

Protecting the supply cables

To ensure protection against short-circuits/overload in the customer's supply cables, appropriately choose and protect the wire cross-sections used.

Observe applicable standards (Germany):

- DIN VDE 0100 (part 430)
- DIN VDE 0298 (part 4) and DIN VDE 0891 (part 1)

Connecting device without connection module

For a supply voltage of 24 V DC ± 20%, protect the device using a separate fuse rated at 2 A.

► Install the fuse in the supply circuit at the start of the supply cable.

Connecting device with connection module

The supply voltage for the device is protected in the connection modules in the circuit after switch S1.

Table 16: Protection of the supply voltage in the connection module

Connection modules	Supply voltage fuse protection	Reference
CDB650-204	2 A (slow-blow)	see "Connecting supply voltage for the device in CDB650-204", page 67
CDM420-0006	2 A (slow-blow)	see "Connecting supply voltage for the device in CDM420-0006", page 81

6.5.3 Wiring the data interface

Wiring the Internet interface

1. Connect the device to the Ethernet connection of the computer via the adapter cable.
2. Set up communication via the SOPAS ET configuration software.

NOTE
The Ethernet interface of the device has an Auto-MDIX function. This automatically adjusts the transmission speed as well as any necessary crossover connections.

Wiring the serial data interface

The maximum data transmission rate for the serial interface depends on the length of cable and on the type of interface.

Table 17: Data transmission rates and recommended maximum lengths of cable

Interface	Data transmission rate	Distance to the target computer (host)
RS-232	Up to 19.2 kBd	Max. 15 m
	38.4 kBd ... 57.6 kBd	Max. 5 m
	115.2 kBd ... 500 kBd	< 2 m

Interface	Data transmission rate	Distance to the target computer (host)
RS-422 [1]	Up to 38.4 kBd	Max. 1,200 m
	38.4 kBd ... 57.6 kBd	Max. 500 m
	57.6 kBd ... 500 kBd	Max. 10 m

[1] For RS-422-compatible cable and corresponding cable termination as per specification

NOTICE

Risk of damage to the internal interface modules!

If the serial data interfaces are wired incorrectly, then electronic components in the device could get damaged.

- Observe the information on wiring.
- Carefully check the wiring prior to switching on the device.

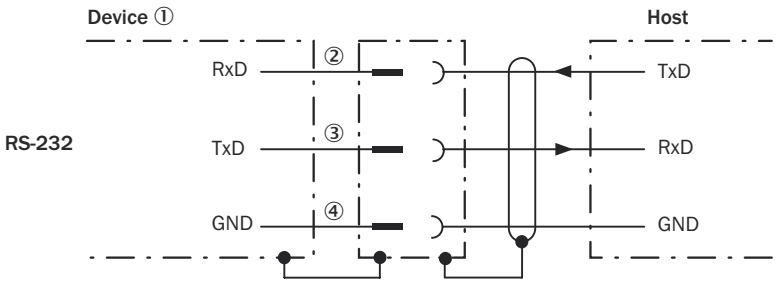

Figure 17: Wiring of the RS-232 serial data interface

① Device

②...④ Pin assignment: see RS-232 pin assignment for the respective device

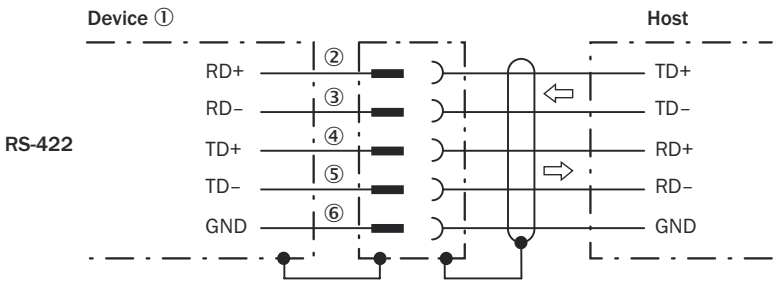

Figure 18: Wiring of the RS-422 serial data interface

① Device

②...⑥ Pin assignment: see RS-422 pin assignment for the respective device

NOTE

Activate the serial data interface type in the device using a configuration software, e.g., the SOPAS ET configuration software.

Wiring data interfaces via a connection module

Connection modules	Data interface	Reference
CDB650-204	RS-232	see "Wiring serial host interface RS-232 of the device in CDB650-204", page 67
CDB650-204	RS-422	see "Wiring serial host interface RS-422 of the device in CDB650-204", page 68

Connection modules	Data interface	Reference
CDM420-0006	RS-232	see "Wiring serial host interface RS-232 of the device in the CDM420-0006", page 82
CDM420-0006	RS-422	see "Wiring serial host interface RS-422 of the device in the CDM420-0006", page 82

Termination of the RS-422 data interface

Termination can be implemented in the connection module via switches.

Additional information on this can be found in the operating instructions for the relevant connection module.

6.5.4 Wiring the CAN interface

NOTE
Activate the CAN data interface in the device using a configuration software, e.g., SOPAS ET.

Configure further settings in the device according to the function of the device in the system configuration.

Wiring CAN interfaces via a connection module

Connection modules	Interface	Reference
CDB650-204	CAN	see "Wiring the CAN interface of the device in the CDB650-204", page 69
CDM420-0006	CAN	see "Wiring the CAN interface of the device in the CDM420-0006", page 83

Connection type 2 (for Systems)

For this connection type, the devices can be directly switched in series without a connection module (line typology). The devices communicate with each other and are supplied with voltage via the CAN In/CAN Out connections.

A maximum of 3 devices can be supplied with voltage via the CAN cable. If a device network/CAN network with more than 3 participants is needed, a separate voltage supply must be used for every 3 devices. Communication between all devices in the network is done via CAN.

Other information on using system devices combined with a system controller can be found in the operation instructions of the controller (e.g. MSC800 modular system controller, part number 8011539).

6.5.5 Wiring the digital inputs

The device has 2 switching digital inputs (Sensor1, Sensor 2).

Functions (examples)

- Start and end external reading cycle.
- Feed in incremental signal.

Position of digital inputs

- Male connector of the device (M12, 17-pin, A-coded)
- Adapter cable (female connector, M12, 17-pin, A-coded/male connector, D-Sub-HD, 15-pin)
- Open end of the adapter cable (female connector, M12, 17-pin, A-coded/open end)

All digital inputs are available at the individual positions.

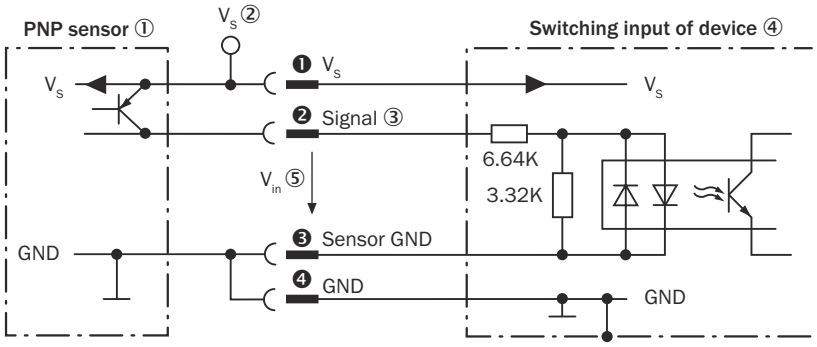

Figure 19: Wiring a digital input

① Trigger sensor (PNP sensor)
② Supply voltage V_S
③ Input signal
④ Digital input of the device (Sensor 1, Sensor 2)
⑤ Input voltage V_{in}
❶ ... ❹ Pin assignment (see respective device)

Table 18: Characteristic data of the digital inputs (Sensor 1, Sensor 2)

Switching behavior	Current at the input starts the assigned function, e.g., start of the internal reading interval of the device. Default: active high Debouncing: 10 ms (standard)
Features	• Opto-decoupled, reverse polarity protected • Can be wired to PNP output of a trigger sensor
Electrical values	The electrical values are identical for all digital inputs of the device. Low: V_{in} [1] ≤ 2 V; I_{in} [2] ≤ 0.3 mA High: 6 V ≤ V_{in} ≤ 30 V; 0.7 mA ≤ I_{in} ≤ 5 mA

1) Input voltage V_{in}.
2) Input current I_{in}.

Function assignment

NOTE
Allocate the functions for the digital inputs in the device using a configuration software, e.g., SOPAS ET.

External digital inputs

If the CMC600 cloning module is used in the CDB or CDM connection module, 2 additional external digital inputs (external input 1, external input 2) are available. The external digital inputs are located at the terminals of the connection module. For the electrical characteristic data of the external digital inputs, see the connection diagrams for the connection modules in these operating instructions.

NOTE
The external digital inputs are software-controlled and therefore do not offer the same timing precision as physical digital inputs. The external digital inputs may not be suitable for time-critical applications.

Wiring digital inputs via connection module

Connection modules	Digital inputs	Reference
CDB650-204	SENS/IN 1 SENS/IN 2	see "Wiring digital inputs of the device in the CDB650-204", page 71
	External input 1 (EXT. IN 1) External input 2 (EXT. IN 2)	see "Wiring the external digital inputs of the device in the CDB650-204", page 73
CDM420-0006	Sensor 1 Sensor 2	see "Wiring digital inputs of the device in the CDM420-0006", page 85
	External input 1 (AUX In 1) External input 2 (AUX In 2)	see "Wiring the external digital inputs of the device in the CDM420-0006", page 87

6.5.6 Wiring the digital outputs

The device has 2 (Result 1, Result 2) or 4 (Result 1 to Result 4) switching digital outputs. The digital outputs are used to signal events in the read operation. Different functions can be assigned to the digital outputs independently of each other for this purpose. If the assigned event occurs, then the corresponding digital output becomes live after the end of the read cycle for the selected pulse duration, for example (default).

Position of digital outputs

- Male connector of the device (M12, 17-pin, A-coded)
- Open end of the adapter cable (female connector, M12, 17-pin, A-coded/open end)
- CDB650-204 connection module

All digital outputs are each available at the individual positions.

The 4 digital outputs are available reduced to 2 outputs (Result 1, Result 2) in the CDM420-0006 connection module. Connect the device to the CDM420-0006 connection module using an adapter cable (female connector, M12, 17-pin, A-coded / male connector, D-Sub-HD, 15-pin).

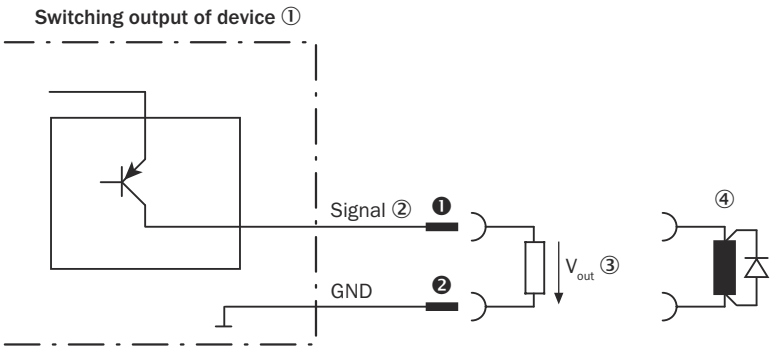

Figure 20: Wiring a digital output

① Digital output of the device (Result 1 to Result 4)
② Output signal
③ Output voltage V_{out}
④ With inductive load: see note
❶... ❷ For pin assignment, see respective device

Table 19: Characteristic data of the digital outputs

Switching behavior	PNP switching to supply voltage V_S Default: No function Logic: not inverted (active high)
Features	• Short-circuit protected • Not electrically isolated from V_S [1]
Electrical values	$0\ V \leq V_{out}$ [2] $\leq V_S$ $(V_S - 1.5\ V) \leq V_{out} \leq V_S$ at I_{out} [3] $\leq 100\ mA$

1) Supply voltage.
2) Output voltage.
3) Output current.

NOTE
Provide an arc-suppression switch at the digital output if inductive load is present.

► Attach a freewheeling diode directly to the load for this purpose.

NOTE
Capacitive loads on the digital outputs have an effect on the switch-on and switch-off behavior. A maximum capacitance of 100 nF is the limit value.

Function assignment

NOTE
Allocate the functions for the digital inputs in the device using a configuration software, e.g., SOPAS ET.

External digital outputs

If the CMC600 cloning module is used in the CDB or CDM connection module, 2 additional external digital outputs (external output 1, external output 2) are available. The external digital outputs are located at the terminals of the connection module. For the electrical characteristic data of the external digital outputs, see the connection diagrams for the connection modules in these operating instructions.

NOTE
The external digital inputs are software-controlled and therefore do not offer the same timing precision as physical digital inputs. The external digital inputs may not be suitable for time-critical applications.

Wiring digital outputs via connection module

Connection modules	Digital outputs	Reference
CDB650-204	RES/OUT 1 RES/OUT 2 RES/OUT 3 RES/OUT 4	see "Wiring digital outputs of the device in the CDB650-204", page 75
	External output 1 (EXT. OUT 1) External output 2 (EXT. OUT 2)	see "Wiring the external digital outputs of the device in the CDB650-204", page 76
CDM420-0006	Result 1 Result 2	see "Wiring digital outputs of the device in the CDM420-0006", page 89
	External output 1 (AUX Out 1) External output 2 (AUX Out 2)	see "Wiring the external digital outputs of the device in the CDM420-0006", page 90

7 Commissioning

7.1 Start SOPAS ET

Overview

SOPAS ET is used for parameterization and servicing purposes (e.g., diagnostics, data logger, firmware update). If the product has been parameterized with the operating buttons, use SOPAS ET to continue parameterization. The product outputs the recorded images to SOPAS ET for display.

Prerequisites

- Computer with the SOPAS ET software installed
  Use SOPAS ET version 3.0 or above.
  The most up-to-date version of the SOPAS ET software can be downloaded from www.sick.com/SOPAS_ET. The respective system requirements for installing SOPAS ET are also specified there.
- Ethernet connection (recommended) or alternatively a free USB port
- SDD file (device description file)
  You can install the SDD file using the device catalog in SOPAS ET. Use the wizard in SOPAS ET to do this. The SDD file can be installed from the product or the SICK website. To install it from the SICK website, you need an Internet connection.

Approach

1. Install the latest version of the SOPAS ET software and the current device description file (SDD file) for the product variant. In this case, select the “Complete” option as suggested by the installation wizard. Administrator rights may be required on the computer to install the software.
2. Start “SOPAS ET” after completing the installation.
3. Establish a connection between SOPAS ET and the product.

✓ The connection wizard starts automatically.
The following IP addresses are configured by default on the product:
- IP address P1: 192.168.0.1
- Subnet mask: 255.255.255.0

4. Double-click on the desired product to add it to the project.
5. To open the product window, double-click the product in the **New Project** window.
6. Select display of the user interface.

✓ SOPAS ET establishes communication with the product and loads the associated device description file for the product.

7. In the **Wizard** window, click on the **Code Reading** button.

✓ The **Initial Setup** window appears.

8. Position the code within the displayed region. Follow the instructions.

✓ The effects of any parameter changes are directly visible.

✓ The product will continuously record images and automatically attempt to find the appropriate settings for the image and the decoder. If the read is successful, these settings can be saved directly.

7.2 Configuration with SOPAS ET

7.2.1 Configuring the product manually

Flex product variant

1. In the **Online Image** window, click the **Live** button.

✓ In **Live** mode, the product starts recording images consecutively and uses the current settings to decode them. The effects of any parameter changes are thus

directly visible.

NOTE

Deactivated in Live mode

- Digital inputs and outputs
- Data output via the host interface

2. Align the product in the desired depth of field range with a medium-height object with a test code.
3. Click the **Camera & Illumination** configuration bar. Use the **Shutter timer** and **Brightness** sliders to adjust the image brightness so that the code is easy to see.
4. Only available in **Extended** mode: activate the sharpness diagnostic bar. To do this, go to the **Camera & Illumination** area and click the **Display sharpness** checkbox.

Dynamic Focus product variant

1. In the **Online Image** window, click the **Live** button.

✓ In the **Live** mode, the product starts recording images consecutively. The product uses the current settings to decode them. The effects of any parameter changes are thus directly visible.

NOTE

Deactivated in Live mode when using Auto Setup

- Digital inputs and outputs
- Data output via the host interface

2. Align the product in the desired depth of field range with a medium-height object with a test code.
3. In the **Auto Setup** window, click on the **Code Reading** button.

✓ The **Initial Setup** window appears.

4. Position the code within the displayed region. Follow the instructions.

✓ The effects of any parameter changes are directly visible.

✓ The product uses the Auto Setup function to adjust itself automatically to suit the working distance, lighting conditions, and quality of the code presented (not applicable to Pharmacode). If the read is successful, these settings can be saved directly.

5. To refocus during operation due to lens changes: to specify to the product the focus height per object, connect a profile measuring sensor (e.g. MLG or VMS) upstream to the device.
6. For custom optimization of the image and code settings of the product, click the **Camera & Illumination** and **Codes** configuration bars on the right. Adjust the parameter values.
7. Only available in **Extended** mode: activate the sharpness diagnostic bar. To do this, go to the **Camera & Illumination** area and click the **Display sharpness** checkbox.
8. To make the changes directly visible, go to the **Online Image** window and click the **Live** button.

7.2.2 Adjusting the brightness and sharpness

Product variant: product with compact C-mount lens

1. Remove the optics protection hood.
2. Loosen the lock nut fitting on the lens or on the mask ring and sharpness ring.
3. Set the aperture ring (upper ring) on the lens unit to a value of 8, which is an appropriate starting value. For better depth of field (value > 8) or increased image quality (value < 8), this value may need to be adjusted in conjunction with the online image display.

4. Adjust the focus to the approximate current working distance of the product from the test code using the focus ring (lower ring) on the top side of the lens. The online image should show a sharp, clear image of the test code with no distortion.

NOTE
The reference point for the working distance is the center of the viewing window on the screwed-on optics protection hood. If the optics protection hood has been removed, the leading edge of the illumination unit can be used instead.

✓ The test code in the image comes into focus and the edges are clearly discernible.

5. If necessary, use the **Shutter time**, **Brightness** and **Contrast** sliders to optimize the brightness and contrast.
6. Available in **Extended** mode: if necessary, activate the sharpness diagnostic bar. To do this, go to the **Camera & Illumination** area and click the **Display sharpness** checkbox.

✓ The sharpness diagnostic bar is now at its maximum position. The test code in the image comes into focus and the edges are clearly discernible.

7. Keep adjusting the sharpness setting on the lens until the test code in the image comes into focus and the edges of the test code are clearly discernible. If the sharpness diagnostic bar is activated: until the sharpness diagnosis bar reaches its maximum position and the color of the bar graph changes to green.
8. Once the online image adjustment process has been successfully completed, use the locking screws to lock both adjusting rings of the lens unit in place.
9. Define a suitable aperture setting for the depth of field. In order to do this, check the settings with the test code. Adjust the mask to a higher value.

NOTE
The higher the aperture number the lower the image brightness. The image brightness can be increased in SOPAS ET using the **Brightness** slider. Increasing the image brightness will, however, reduce the image quality.

10. Attach the optics protection hood again and screw it tight.

7.2.3 Continuing the configuration

1. Make additional settings (e.g. codes, triggers, data processing, data interface).
2. In the **Online Image** window, click the **Operation** button.
3. Test the settings during operational use.

7.3 Configuring the product with operating buttons

Overview

The two function buttons, the second display level of the status LEDs and the bar graph display are used to manually adjust the reading characteristics of the product with **Auto Setup (A-S)**.

Auto Setup (A-S) is not possible with a Pharmacode.

Approach

1. Start **Setup** mode.

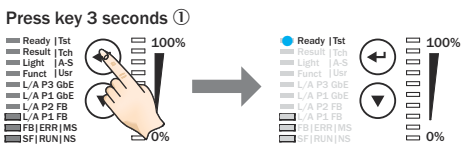

① Press the ↵ function button for 3 seconds

2. Align the product with the code.

Figure 21: Test code

3. Select **Auto Setup (A-S)**.

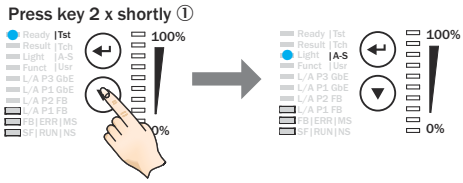

① Press the ▼ function button twice briefly.

✓ The **Auto Setup (A-S)** LED lights up blue.

4. Start **Auto Setup (A-S)**.

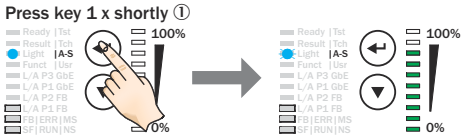

① Press the ↵ function button once briefly.

✓ The **Auto Setup (A-S)** LED flashes blue.
The product automatically adjusts to suit the lighting conditions and the quality of the code presented. The Dynamic Focus product variant also automatically adjusts to the working distance. The product permanently stores the values determined for the two parameter modules (image, decoder) during this process, thereby overwriting the existing configuration.

5. If the **Auto Setup (A-S)** LED lights up yellow or red, the read result is inadequate. If this is the case, check the alignment and distance of the product in relation to the code. Repeat the process.
6. Wait until **Auto Setup (A-S)** has finished. The bar graph display shows the progress of the **Auto Setup (A-S)** function in percent. 100% means **Auto Setup (A-S)** has finished.

✓ The **Auto Setup (A-S)** LED indicates the result.

7. Exit **Live** mode. Save parameters.

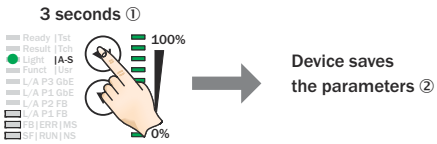

① Press the ↵ function button for 3 seconds

② Product permanently saves the parameters

✓ The existing configuration in the product is overwritten.
Alternatively, the product saves the parameters automatically if 5 minutes elapse without a pushbutton being pressed, and it returns to read mode.

Further topics

- Display and control elements

7.4 Saving the parameter set

Overview

The parameter values in the working memory of the product can be modified in SOPAS ET. Current parameter values can then be permanently stored and therefore transmitted to the permanent parameter memory of the product.

To be able to restore the parameter set to a replacement product, for example in the event of a product failure, you should also save the parameter set externally.

Approach

1. To save the parameters permanently in SOPAS ET: Parameter > Save parameters .

✓ The product stores the parameter set internally in the permanent parameter memory.

✓ If a memory card is installed in the product, the product also saves the parameter set externally on the memory card. When the product starts saving, the **MicroSD** status LED goes out. When the product has finished saving, the **MicroSD** status LED lights up green again.

2. In SOPAS ET, manually save the parameter set as a project file on the computer: .

✓ The parameter set is also saved externally. The parameter set in the project file can be transmitted to a replacement product via download.

Further topics

- External data back-up

7.5 External data back-up

Manual data backup using project file

The parameter set can be manually saved on the computer as a project file (*.sopas). This is the generally recommended procedure. Using the project file, the parameter set can be transferred to a replacement product via download.

Automatic data backup

An additional storage medium is required to automatically save the parameter set to an external location. The product is permanently connected to the external storage medium.

External storage medium

- MicroSD memory card
- CMC600 cloning module, integrated into the Connection Device Basic or Connection Device Modular connection module
- Connection Device Fieldbus module, continuous operation of the product in proxy mode
  If required, use the microSD memory card in combination with a CMC600 cloning module or a Connection Device Fieldbus fieldbus module.

Once it is switched on, the product automatically detects an external storage medium. The subsequent product behavior depends on the content of the storage medium. The goal is for the internal parameter set and the parameter set saved externally to always be identical.

Content of the storage medium	Behavior
Empty	Once the parameter set is permanently saved, the product also saves the internal parameter set on the storage medium. The prerequisite is that there is enough storage space.
No parameter set possible to interpret	
Parameter set possible to interpret	After being switched on, the product automatically loads the compatible parameter set from the external storage medium into the working memory and internal, permanent parameter memory. The product then starts with its new valid parameter set.

Use in PROFINET

1 After starting, the product loads the last permanently stored internal parameter set to its working memory.
2 The product then searches for a valid parameter set in the optional external memory card slot. If there is a positive search result, the product overwrites the existing parameter set in its working memory with this external parameter set.
3 If the PROFINET controller sends a parameter set, the product again overwrites the parameter set in its working memory. These changes are lost when the product is switched off. The PROFINET controller must then again send the most recently valid parameter values each time the product is restarted (supply voltage is switched on).

7.6 MicroSD memory card

MicroSD memory card

The product has a card slot for a microSD memory card integrated in the housing. The memory card is used as an external storage medium. The microSD memory card can also be ordered as an optional accessory. To ensure that the memory card functions reliably, only use card types (industrial standard) approved by SICK.

Functions

Function	Description
Cloning	Save currently valid save parameter set on an external storage medium. The externally stored parameter set is also updated automatically each time the parameterization is permanently saved. The cloning function provides the means, for example in the event of a product fault, for manual transmission of the parameter set to an replacement product of the same type.
Firmware download (update)	For information, see SICK Support Portal
Image backup (optional)	Image is saved for a failed read (read result: No Read).

Other functions are available upon request.

Complementary information

For information on other available functions, see “Overview of SOPAS Parameters” in the online help of the product (part number: 8020322, www.sick.com/8020322).

Further topics

- Inserting and removing memory card
- External data back-up

7.7 Inserting and removing memory card

Important information

NOTICE
Loss of configuration data

Do not remove the memory card or switch off the supply voltage while the parameter set is being saved. Otherwise all parameters not yet saved permanently will be lost.

Prerequisites

- The supply voltage for the product is switched off.
- To remove the memory card during operation, select the **Remove SD card** option under **Analysis/SD card** in SOPAS ET.
- If the cover is open, the product does not fulfill any specified enclosure rating. Only briefly open the cover. Protect the product against moisture and dust during this time.

Approach

Inserting the memory card

1. Undo the screws on the hinged cover.
2. Opening cover:
   - Carefully pull the upper edge of the cover away from the housing a little at the level of the hinges on the side. Use both of the recesses on the inside of the cover to do this.
   - Fold the cover upwards starting from the bottom edge.
3. Making sure it is in the correct position, insert the memory card into the slot until it locks into place. When doing this, position the contacts so that they are facing to the rear and upwards, see the card symbol on the product.
4. Close the cover again. Make sure that the cover is completely flush with the housing.
5. Re-tighten the screws on the cover.
6. Switch on the supply voltage for the product.

Remove memory card

1. Undo the screws on the cover.
2. Making sure it is in the correct position, push the memory card into the slot until it is released. When doing this, position the contacts so that they are facing to the rear and upwards, see the card symbol on the product.
3. Remove the memory card.
4. Close the cover again. Make sure that the cover is completely flush with the housing.
5. Tighten the screws on the cover.
6. Switch on the supply voltage for the product.

8 Maintenance

8.1 Maintenance plan

During operation, the device works maintenance-free.

NOTE
No maintenance is required to ensure compliance with the laser class.

NOTE
No maintenance is required to ensure compliance with the LED risk group.

Depending on the assignment location, the following preventive maintenance tasks may be required for the device at regular intervals:

Table 20: Maintenance plan

Maintenance work	Interval	To be carried out by
Check device and connecting cables for damage at regular intervals.	Depends on ambient conditions and climate.	Specialist
Clean housing and viewing window.	Depends on ambient conditions and climate.	Specialist
Check the screw connections and plug connectors.	Depends on the place of use, ambient conditions or operating requirements. Recommended: At least every 6 months.	Specialist
Check that all unused connections are sealed with protective caps.	Depends on ambient conditions and climate. Recommended: At least every 6 months.	Specialist

8.2 Cleaning

Cleaning includes the viewing window and the housing of the device.

NOTICE
Equipment damage due to improper cleaning.
Improper cleaning may result in equipment damage.

- Only use recommended cleaning agents and tools.
- Never use sharp objects for cleaning.

Cleaning the viewing window

Check the viewing window of the device for accumulated dirt at regular intervals. This is especially important in harsh operating environments (dust, abrasion, damp, fingerprints, etc.).

The viewing window lens must be kept clean and dry during operation.

NOTE
Static charging may cause dust particles to stick to the viewing window. This effect can be avoided by using an anti-static cleaning agent in combination with the SICK lens cloth.

The type of material used for the viewing window can be found on the type label (see "Type code", page 14).

Cleaning procedure:

- ► Switch off the device for the duration of the cleaning operation. If this is not possible, wear suitable laser safety goggles. These must absorb radiation of the device's wavelength effectively.
- ► Glass window: remove dust from the viewing window using a soft, clean brush. If necessary, also clean the viewing window with a clean, damp, lint-free cloth, and a mild anti-static lens cleaning fluid.
- ► Plastic window: clean the viewing window only with a clean, damp, lint-free cloth, and a mild anti-static lens cleaning fluid.

NOTICE

If the inspection window is scratched or damaged (cracked or broken), the lens must be replaced. Contact SICK Support to arrange this.

- If the inspection window is cracked or broken, take the device out of operation immediately for safety reasons and have it repaired by SICK.

Cleaning the housing

In order to ensure that heat is adequately dissipated from the device, the housing surface must be kept clean.

- ► Clear the build up of dust on the housing with a soft brush.

9 Troubleshooting

9.1 General faults, warnings, and errors

Possible faults and corrective actions are described in the table below for troubleshooting. In the case of faults that cannot be rectified using the information below, please contact SICK Service. To find your agency, see the final page of this document.

NOTE
To help us to resolve the matter quickly, please note down the details on the type label.

Situation	Error or fault
Mounting	■ Product poorly aligned to objects with codes (e.g. glare) ■ Trigger sensor for reading cycle incorrectly positioned (e.g. internal reading interval is opened too late or closed too early) ■ Incremental encoder (optional) incorrectly positioned
Electrical installation	■ Interfaces of the product incorrectly wired
Configuration	■ Functions not adapted to local conditions, e.g., parameters for the data interface not set correctly ■ Technical limits not observed, e.g., working range, aperture angle ■ Trigger source for read cycle not selected correctly
Operation	■ Start/stop operation: external read cycle missing, more than one object is in the reading field ■ Product faults (hardware, software)

9.2 System information

The product reports any errors that occur in a number of ways. Fault output is staggered, allowing for an increasingly detailed level of analysis:

- Communication errors can occur when transmitting data to the product. The product then returns an error code.
- For errors that occur during reading, the product writes errors codes in the status log.

9.3 Displaying the status log

Overview

The product saves only the last five entries for each error type. The status log is retained even after switching the product off and on again.

Error types
- Information
- Warning
- Error
- Critical fault

Approach

1. Connect the SOPAS ET configuration software to the product.
2. Opening the product in the project tree: **SERVICE** > **SYSTEM STATUS** > **SYSTEM INFORMATION** tab.

9.4 Repairs

Repair work on the device may only be performed by qualified and authorized personnel from SICK AG. Interruptions or modifications to the device by the customer will invalidate any warranty claims against SICK AG.

9.5 Returns

- ► Only send in devices after consulting with SICK Service.
- ► The device must be sent in the original packaging or an equivalent padded packaging.

NOTE
Optional memory card

- Check whether there is a memory card in the card slot of the device. If yes, remove the memory card from the faulty device in **de-energized state**.
- Do not send in the memory card!

NOTE
To enable efficient processing and allow us to determine the cause quickly, please include the following when making a return:

- Details of the contact person
- Description of the application
- Description of the fault that occurred

9.6 Replacing the product

Transferring configuration data

The current configuration data of the product to be replaced can be transferred to a replacement product. Data transmission depends on the selected data backup concept when configuring the product to be replaced. The configuration data of the product is combined as a parameter set. The replacement product saves the parameter set to the permanent parameter memory.

Prerequisites:

- Product type identical
- External storage medium with the current configuration data

External storage medium	Prerequisite for configuration backup	Data transmission
MicroSD memory card	The configuration data is automatically saved on the memory card during the last save operation in the product with the **Permanent** option. The prerequisite is sufficient storage capacity on the microSD memory card.	Connecting a computer to SOPAS ET is not necessary. The product automatically transmits the data.
CMC600 cloning module in the CDB or CDM connection module	The product to be replaced is continuously operated connected to the connection module.	Connecting a computer to SOPAS ET is not necessary. The product automatically transmits the data. If the microSD memory card and CMC600 cloning module are present, the configuration data in the parameter cloning module has higher priority.

External storage medium	Prerequisite for configuration back-up	Data transmission
CDF600 fieldbus module	The product to be replaced is continuously operated in proxy mode connected to the fieldbus module.	Connecting a computer to SOPAS ET is not necessary. The product automatically transmits the data. If the microSD memory card and fieldbus module are present, the configuration data in the fieldbus module has higher priority.
Project file (*sopas)	The configuration data is saved independently as a project file (*.sopas) on the computer after configuration of the product to be replaced.	Transfer the configuration data independently via download to the replacement product and save it there permanently.

Removing the product to be replaced:

1. Switch off the supply voltage to the product that is to be replaced.
2. Mark the position and alignment of the product on the bracket or surroundings.
3. Disconnect and remove all connecting cables of the product.
4. Remove the product from the bracket.
5. Backed-up configuration data: if an optional microSD memory card is installed in the product, remove the memory card with the backed-up parameter set.

Putting the replacement product into operation:

1. Backed-up configuration data: install the optional microSD memory card from the product that is to be replaced in the replacement product of the same type.
2. Mount and align the replacement product (see "Mounting", page 20). When doing so, note the previously applied markings on the bracket or surroundings.
3. Reconnect the connecting cables of the replacement product (see "Electrical installation", page 25).
4. Switch on the supply voltage for the replacement product.

✓ The product starts with its last permanently saved parameter set. In the case of products that have not been used before, this corresponds to the factory default setting.

✓ The product searches for external storage media with a valid parameter set. Depending on the success of the search, the replacement product proceeds as follows:
   - When the replacement product detects an external storage medium, the replacement product automatically transfers the configuration data to the permanent product memory.
   - If the replacement product does not detect any external storage media, the replacement product will start with its last permanently stored parameter set. In the case of products that have not been used before, this corresponds to the factory default setting.

5. Establish a connection with the replacement product using the SOPAS ET configuration software.
6. Optional: transfer the configuration data of the product to be replaced by downloading to the replacement product and permanently store this data in the device.

10 Decommissioning

10.1 Disposal

CAUTION
Risk of injury due to hot device surface.

The surface of the device can become hot.

- Before performing work on the device (e.g. mounting, cleaning, disassembly), switch off the device and allow it to cool down.
- Ensure good dissipation of excess heat from the device to the surroundings.

If a device can no longer be used, dispose of it in an environmentally friendly manner in accordance with the applicable country-specific waste disposal regulations. Do not dispose of the product along with household waste.

NOTICE
Danger to the environment due to improper disposal of the device.

Disposing of devices improperly may cause damage to the environment.

Therefore, observe the following information:

- Always observe the national regulations on environmental protection.
- Separate the recyclable materials by type and place them in recycling containers.

11 Technical data

NOTE

The relevant online product page for your product, including technical data, dimensional drawing, and connection diagrams, can be downloaded, saved, and printed from the Internet.

The product page can be accessed via the **SICK Product ID: pid.sick.com/{P/N}/{S/N}**

{P/N} corresponds to the part number of the product, see type label.

{S/N} corresponds to the serial number of the product, see type label (if indicated).

Please note: This documentation may contain further technical data.

11.1 Features

Variant	Lector64x Flex (V2D64xR-MCxxxx) Lector65x Flex (V2D65xR-MCxxxx)	Lector65x Dynamic Focus (V2D65xR-MExxxx)
Optical focus	Manual sharpness and aperture setting on optional lens	Dynamic and externally triggered electrical focus adjustment depending on working distance
Sensor	CMOS matrix sensor, monochrome (black and white)	
Sensor resolution	V2D64**2**R-Mxxxxx: 1.7 megapixel (1,600 px x 1,088 px) V2D65**2**R-Mxxxxx: 2.1 megapixel (2,048 px x 1,088 px) V2D65**4**R-Mxxxxx: 4.2 megapixel (2,048 px x 2,048 px)	
Integrated illumination unit	Optional e.g., variants of the integrated VI83I illumination unit **11 LEDs, type-dependent combination of light colors:** • Visible white light • Visible blue light (λ = 455 nm ± 20 nm) • Visible red light (λ = 620 nm ± 30 nm)	**11 LEDs, type-dependent combination of light colors:** • Visible white light • Visible blue light (λ = 455 nm ± 20 nm)
Feedback LED (spot in field of view)	Optional, e.g. with variants of the integrable VI83I ring illumination unit 1 LED: visible green light (λ = 525 nm ± 15 nm), RG 1	1 LED: visible green light (λ = 525 nm ± 15 nm), RG 1

Variant	Lector64x Flex (V2D64xR-MCxxxx) Lector65x Flex (V2D65xR-MCxxxx)	Lector65x Dynamic Focus (V2D65xR-MExxxx)
LED risk group of illumination unit	**Variants of the integratable VI83I illumination unit (risk group RG 1)** • Type “visible white light and feedback LED” (part number: 2069006, 2074001, 2069099) • Type “visible red light and feedback LED” (part number: 2074003, 2074005, 2066563) • Type “visible blue light - medium and feedback LED” (number: 2074012) • Type “visible blue light - wide and feedback LED” (number: 2074009) Risk group RG 1 (low risk) according to IEC 62471-1: 2006-07/ EN 62471-1: 2008-09. **Radiance:** • L_B [1]: < 10 x 10^3 W/(m^2sr) within 100 seconds; at a distance ≥ 200 mm • L_R [2]: < 7 x 10^5 W/(m^2sr) within 10 seconds; at a distance ≥ 200 mm	**Variants of the integratable VI83I illumination unit (risk group RG 1)** • Type “visible white light and feedback LED” (part number: 2069006, 2074001, 2069099) Risk group RG 1 (low risk) according to IEC 62471-1: 2006-07/ EN 62471-1: 2008-09. **Radiance:** • L_B [1]: < 10 x 10^3 W/(m^2sr) within 100 seconds; at a distance ≥ 200 mm • L_R [2]: < 7 x 10^5 W/(m^2sr) within 10 seconds; at a distance ≥ 200 mm
	Variants of the integrated VI83I illumination unit (risk group RG 2) • Type “visible blue light - narrow and feedback LED” (part number: 2074007) Risk group 2 (moderate risk) according to IEC 62471-1: 2006-07/EN 62471-1: 2008-09 due to exposure to blue light. **Radiance:** • L_B [1]: < 10 x 10^3 W/(m^2sr) within 50 seconds (RG 2); at a distance ≥ 200 mm • L_R [2]: < 7 x 10^5 W/(m^2sr) within 10 seconds (RG 1); at a distance ≥ 200 mm Risk RG 1 (low risk) corresponding to L_B < 10 x 10^3 W/(m^2sr) within 100 seconds for distances > 1 m.	**Variants of the integrated VI83I illumination unit (risk group RG 2)** • Type “visible blue light - narrow and feedback LED” (part number: 2074007) Risk group 2 (moderate risk) according to IEC 62471-1: 2006-07/EN 62471-1: 2008-09 due to exposure to blue light. **Radiance:** • L_B [1]: < 10 x 10^3 W/(m^2sr) within 50 seconds (RG 2); at a distance ≥ 200 mm • L_R [2]: < 7 x 10^5 W/(m^2sr) within 10 seconds (RG 1); at a distance ≥ 200 mm Risk RG 1 (low risk) corresponding to L_B < 10 x 10^3 W/(m^2sr) within 100 seconds for distances > 1 m.
Laser alignment aid	1 LED, can be switched off Visible red light (λ = 630 nm ... 680 nm)	
Laser class	**Laser alignment aid:** Class 1 Laser Product according to IEC 60825-1: 2014 and EN 60825-1:2014+A11:2021. Complies with 21 CFR 1040.10/11 except for conformance with IEC 60825-1 Ed. 3 as described in Laser Notice No. 56, dated May 8, 2019. P < 1.40 mW	

Variant	Lector64x Flex (V2D64xR-MCxxxx) Lector65x Flex (V2D65xR-MCxxxx)	Lector65x Dynamic Focus (V2D65xR-MExxxx)
Scanning frequency	**Lector64x Flex** 1.7 Mpx: 40 Hz **Lector65x Flex** 2.1 Mpx: 70 Hz 4.2 Mpx: 40 Hz	2.1 Mpx: 70 Hz 4.2 Mpx: 40 Hz
Code resolution	≥ 0.1 mm, depending on the lens	≥ 0.12 mm, depending on working distance
Working range	Depending on type, see "Field of view diagrams", page 60	
Lens	Application-specific, optionally available as accessory	Integrated V2D65xR-MxxHxx: 54 mm V2D65xR-MxxKxx: 40 mm

1) L_B= Hazard from blue light.
2) L_R= Hazard to the retina of the eye due to heating.

11.2 Mechanics and Electronics

Type	Lector64x Flex (V2D64xR-MCxxxx) Lector65x Flex (V2D65xR-MCxxxx)	Lector65x Dynamic Focus (V2D65xR-MExxxx)
Connection type	**Connection variant 1 (V2D6xxR-MxxxAx)** • 1 male connector, M12, 17-pin, A-coded (serial, CAN, I/O, voltage supply) • 2 female connectors, M12, 8-pin, X-coded (Ethernet, 1 GBit/s, P1 without function) • 1 female connector, M8, 4-pin (USB) **Connection variant 2 (V2D6xxR-MxxxFx), for systems** • 1 male connector, M12, 5-pin, A-coded (CAN IN) • 1 female connector, M12, 5-pin, A-coded (CAN OUT) • 1 female connector, M8, 3-pin (control of external illumination unit) • 2 female connectors, M12, 8-pin, X-coded (Ethernet, 1 GBit/s, P1 without function) **Connection variant 3 (V2D6xxR-MxxxHx), with DualPort PROFINET** • 1 male connector, M12, 17-pin, A-coded (serial, CAN, I/O, voltage supply) • 1 female connector, M12, 8-pin, X-coded (Ethernet, 1 GBit/s) • 1 female connector, M8, 4-pin (USB) • 2 female connectors, M12, 4-pin, D-coded (Ethernet, 100 mBit/s)	
Supply voltage V_S	DC 24 V ± 20% Voltage source in accordance with ES1 and PS2 (EN62368-1) or SELV and LPS (EN 60950-1) or class 2 (UL 1310) required.	DC 24 V ± 20% Voltage source in accordance with ES1 and PS2 (EN 62368-1) or SELV and LPS (EN 60950-1).
Power consumption	Operation: 20 W ± 20% typical [1]	
Current consumption	Max. 2.0 A for a typical load of 100 mA on each of the 4 digital outputs	
Housing material	Aluminum die cast	
Housing color	Light blue (RAL 5012)	
Viewing window material	Glass or plastic (PMMA), 2 mm thick, with scratch-proof coating: see "Type code", page 14	
Hinged cover (rear side of device)	Material: Plastic Function: for temporary access to microSD memory card slot Hinged [2], screws (SW2 hexagon key), captive	
Enclosure rating	IP 65 (EN 60529, EN 60529 / A2) [3]	

Type	Lector64x Flex (V2D64xR-MCxxxx) Lector65x Flex (V2D65xR-MCxxxx)	Lector65x Dynamic Focus (V2D65xR-MExxxx)
Protection class	III	
Electrical safety	EN 62368-1 (2014-08)	
Weight	Max. 635 g, without lens and connecting cables	Max. 950 g, model-dependent
Dimensions (L x W x H)	142 mm x 89 mm x 46 mm [3]	142.8 mm x 90 mm x 106.1 mm

1) For digital outputs without load.
2) When the cover is open, the product no longer complies with the specified protection class.
3) **Prerequisites:**
- The optics protection hood must be screwed tightly onto the product.
- The foldable cover must be flush with the product and screwed tight.
- The cables plugged into the electrical connections must be screwed tight. Unused electrical connections are sealed off with a protective cap.

4) Housing only, without lens and protective hood.

11.3 Dimensional drawing

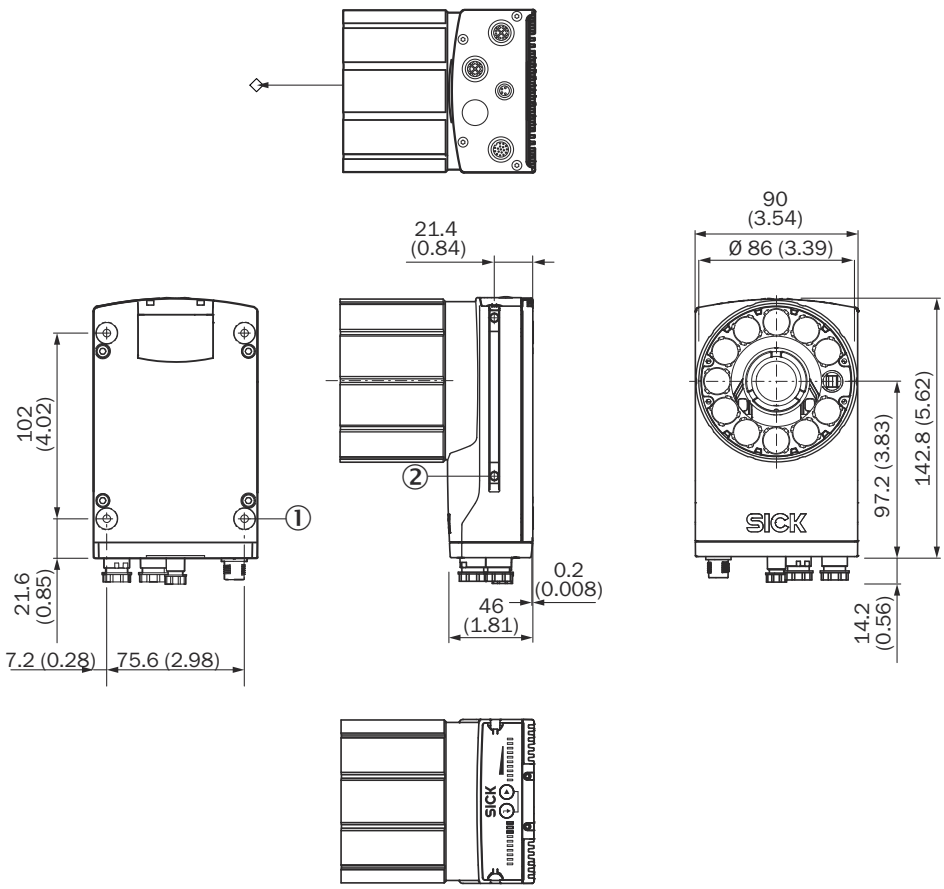

Figure 22: Structure and device dimensions, unit: mm (inch), decimal separator: period

① 4 threaded mounting holes, M5: blind tapped hole; 5.5 mm deep; max. depth of thread 5 mm

② 2 M5 sliding nuts; 5.5 mm deep; pivoting; as an alternative method of mounting the product

11.4 Performance

Type	Lector64x Flex (V2D64xR-MCxxxx) Lector65x Flex (V2D65xR-MCxxxx)	Lector65x Dynamic Focus (V2D65xRMExxxx)
Readable code structures	1D codes, Stacked, 2D codes	
1D code types (bar code)	GS1-128 / EAN 128, UPC/GTIN/EAN, 2/5 Interleaved, Pharmacode, GS1 DataBar, Code 39, Code 128, Codabar, Code 32, Code 93	
Postal codes	USPS (Postnet, Planet, USPS4SCB), Australian Post, Dutch KIX Post, Royal Mail, Swedish Post	
2D code types	Data Matrix ECC200, GS1 Data Matrix, MaxiCode, QR-Code	
Stacked code types	PDF417	
Code qualification	Based on ISO/IEC 16022, ISO/IEC 15415, ISO/IEC 18004	
Internal image memory	512 MB External image memory on optional microSD memory card (max. 16 GB)	

11.5 Interfaces

Type	Lector64x Flex (V2D64xR-MCxxxx) Lector65x Flex (V2D65xR-MCxxxx)	Lector65x Dynamic Focus (V2D65xR-MExxxx)
Ethernet	**Protocol:** • TCP/IP • EtherNet/IP **Functions:** • Host (data output of the read result) • AUX (Service) [2] • FTP (image transfer) Data transmission rate: 10/100/1,000 MBit/s MAC address (device-specific), see type label	
Serial [1] RS-232/422	Function: host (data output of the read result) Data transmission rate: 0.3 kBd ... 115.2 kBd	
Serial RS-232 [1]	Function: AUX, for Service [2] Data transmission rate: 57.6 kBd	
CAN	Protocol: SICK CAN Sensor Network CSN (primary/secondary, multiplexer/server) Function: host (data output of the read result) Data transmission rate: 20 kBit/s ... 1 MBit/s	
PROFIBUS [1]	Function: host (RS-232, data output of the read result) Type of fieldbus integration: optionally over external CDF600-21xx fieldbus module Function blocks for various PLC manufacturers are available online on the product page.	
USB 2.0	Function: AUX (service) [3]	
PROFINET [1]	Function: host (RS-232, data output of read result), PROFINET Single Port, PROFINET Dual Port Type of fieldbus integration: PROFINET Single Port, PROFINET Dual Port optionally over external CDF600-2200 fieldbus module Function blocks for various PLC manufacturers are available online on the product page.	

Type	Lector64x Flex (V2D64xR-MCxxxx) Lector65x Flex (V2D65xR-MCxxxx)	Lector65x Dynamic Focus (V2D65xR-MExxxx)
Digital inputs [1]	Type: 2 physical digital inputs, switching (“Sensor 1”, “Sensor 2”) Optional 2 additional external digital inputs (software-controlled) via the CMC600 parameter cloning module in the CDB650-204 or CDM420-0006 connection module V_{in}= max. 32 V, I_{in}= max. 5 mA Opto-decoupled, reverse polarity protected, adjustable debounce time	
Configurable digital inputs	Encode input, external trigger	
Digital outputs [1]	Type: 4 physical digital outputs, switching (“Result1”, “Result2”, “Result3”, “Result4”) When using the CDB420: 2 physical digital outputs, switching (“Result1”, “Result2”) Optional 2 additional external logical digital outputs (software-controlled) via optional CMC600 module in the CDB650-204 or CDM420-0006 connection module $V_{out} = V_S - 1.5$ V, $I_{out} \leq 100$ mA Short-circuit protected, not electrically isolated from the supply voltage	
Configurable digital outputs	Read confirmation, external illumination control, freely configurable output condition, “Device Ready”	
Reading pulse	Digital inputs, free, serial interface, Ethernet, CAN, auto pulse, presentation mode	
Optical indicators	10 status LEDs 10 bar graph LEDs 1 feedback LED for the integratable VI83I ring illumination unit (green), as a light spot on the code	
Acoustic indicator	1 beeper (can be switched off, with functions for indicating a result)	
Operating elements	2 buttons (select, start, stop functions)	
Operator interfaces	Web server	
Configuration tools (parameterization)	SOPAS ET	
MicroSD memory card	microSD memory card (flash card) max. 16 GB, optional	
Data storage and retrieval	image and data storage via microSD memory card and external FTP	
Maximum encoder frequency	1 kHz	
External illumination control	Via digital output (max. 24 V trigger) or external illumination connection	

1) Does not apply to system variants of type V2D64xR-MCxxFx, type V2D65xR-MCxxFx and V2D65xR-MExxFx for systems (connection variant 2).
2) For example: Configuration, diagnosis, transponder access or display of the read result.
3) Data interface only for temporary use (service).

11.6 Ambient data

Type	Lector64x Flex (V2D64xR-MCxxxx) Lector65x Flex (V2D65xR-MCxxxx)	Lector65x Dynamic Focus (V2D65xRMExxxx)
Electromagnetic compatibility (EMC)	Immunity: EN 61000-6-2: 2005-08 Radiated emission: EN 61000-6-3 (2007-01)	
Vibration resistance	EN 60068-2-6:2008-02	
Shock resistance	EN 60068-2-27: 2009-05	
Ambient operating temperature	0 °C ... +50 °C	
Storage temperature	–20 °C ... +70 °C	
Permissible relative humidity	0% ... 90%, non-condensing	
Ambient light immunity	2,000 lx on code	

11.7 Field of view diagrams

Lector64x Flex

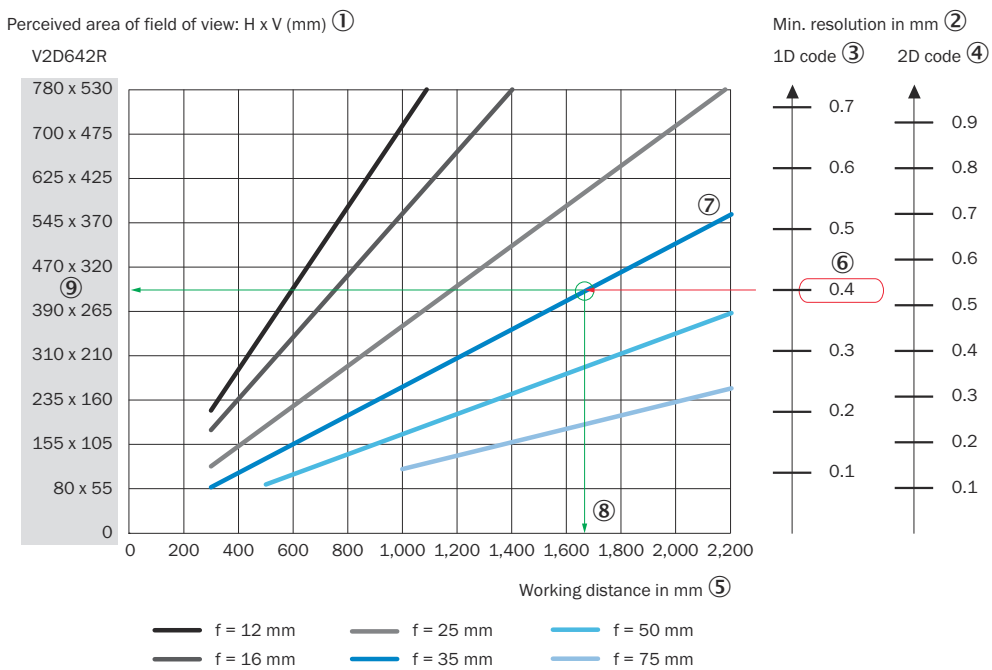

① Perceived field of view area: horizontal x vertical (mm)
② Minimum resolution in mm
③ 1D code
④ 2D code
⑤ Working distance in mm
⑥ Selected code resolution
⑦ Focal length of lens, here for example for f = 35.0 mm
⑧ Reading off: resultant maximum working distance
⑨ Reading off: Resulting perceived area of the field of view (mm x mm)

Lector65x Flex

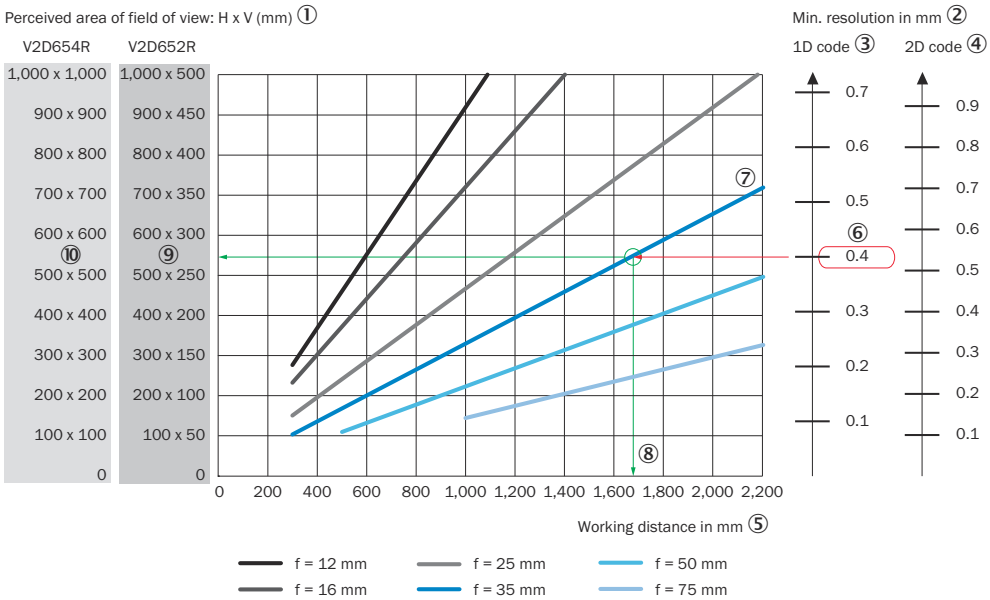

① Perceived field of view area: horizontal x vertical (mm)

② Minimum resolution in mm

③ 1D code

④ 2D code

⑤ Working distance in mm

⑥ Selected code resolution

⑦ Focal length of lens, here for example for f = 35.0 mm

⑧ Reading off: resultant maximum working distance

⑨ Reading off: Resulting perceived area of the field of view V2D65**2**R (mm x mm)

⑩ Reading off: Resulting perceived area of the field of view V2D65**4**R (mm x mm)

Lector65x Dynamic Focus

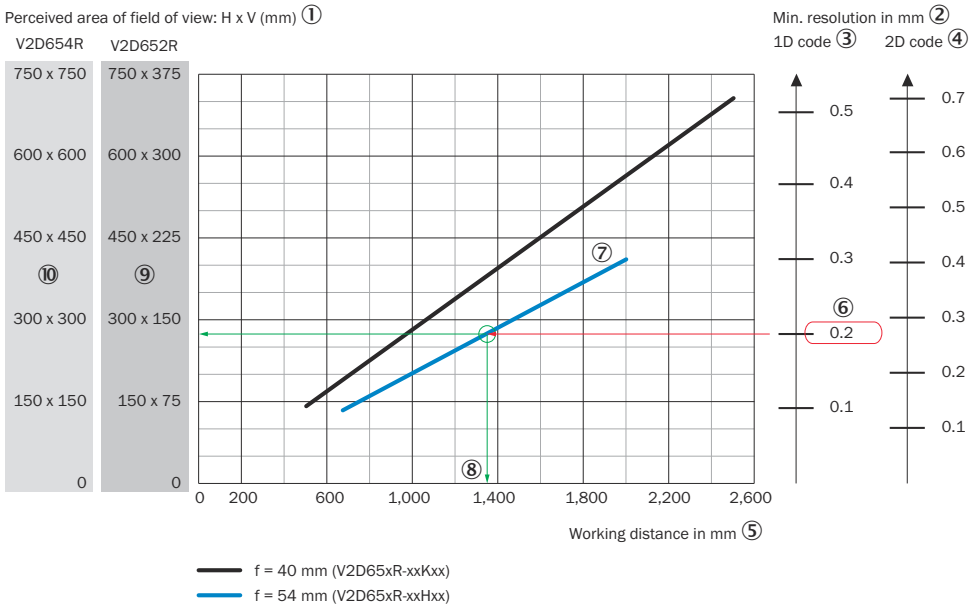

① Perceived field of view area: horizontal x vertical (mm)
② Minimum resolution in mm
③ 1D code
④ 2D code
⑤ Working distance in mm
⑥ Selected code resolution
⑦ Focal length of lens, here for example for f = 54.0 mm
⑧ Reading off: resultant maximum working distance
⑨ Reading off: Resulting perceived area of the field of view V2D65**2**R (mm x mm)
⑩ Reading off: Resulting perceived area of the field of view V2D65**4**R (mm x mm)

12 Accessories

NOTE

On the product page you will find accessories and, if applicable, related installation information for your product.

The product page can be accessed via the **SICK Product ID: pid.sick.com/{P/N}/{S/N}**

{P/N} corresponds to the part number of the product, see type label.

{S/N} corresponds to the serial number of the product, see type label (if indicated).

13 Annex

13.1 Declarations of conformity and certificates

You can download declarations of conformity and certificates via the product page.

The product page can be accessed via the **SICK Product ID: pid.sick.com/{P/N}/{S/N}**

{P/N} corresponds to the part number of the product, see type label.

{S/N} corresponds to the serial number of the product, see type label (if indicated).

13.2 Connection diagrams of connection module CDB650-204

13.2.1 Connection of the device to CDB650-204

Device = Lector64x = V2D64xx-xxxxAx

Device = Lector65x = V2D65xx-xxxxAx

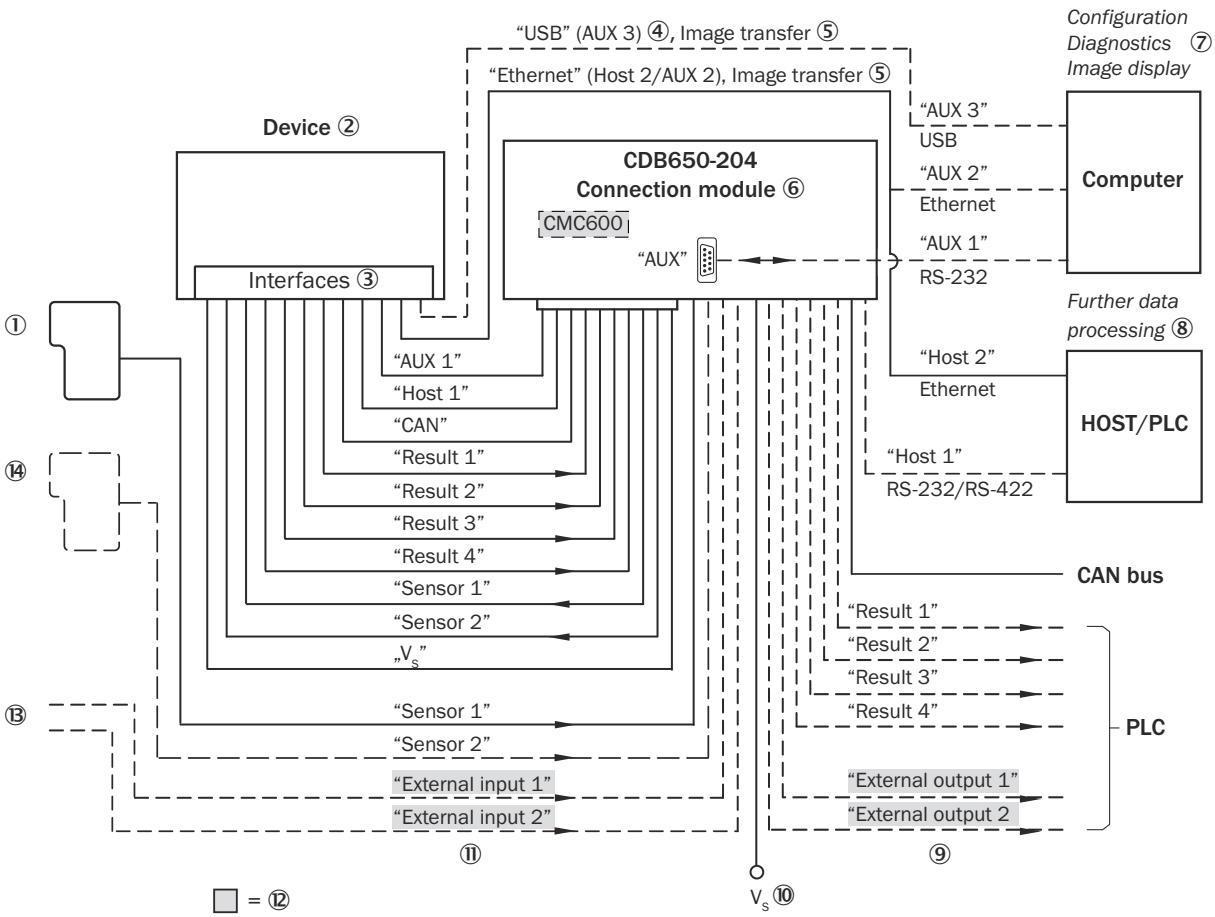

Figure 23: Connection of the device (Ethernet variant) to peripherals via CDB650-204 (overview)

① External trigger sensor
② Device
③ Interfaces
④ USB interface, for temporary use as a servicing interface only
⑤ Image transmission
⑥ Connection modules
⑦ Configuration, diagnostics or image display
⑧ Data further processing
⑨ External digital outputs
⑩ Supply voltage V_S
⑪ External digital inputs
⑫ The optional CMC600 parameter cloning module is required in the connection module in order to use the additional external digital inputs and outputs of the device (highlighted in gray).
⑬ Other functions
⑭ Can also be used as an alternative stop trigger (e.g., photoelectric sensor) or travel increment (incremental encoder), depending on the application

13.2.2 Wiring overview of the CDB650-204

Device = Lector64x = V2D64xx-xxxxAx, 1 digital input used

Device = Lector65x = V2D65xx-xxxxAx, 1 digital input used

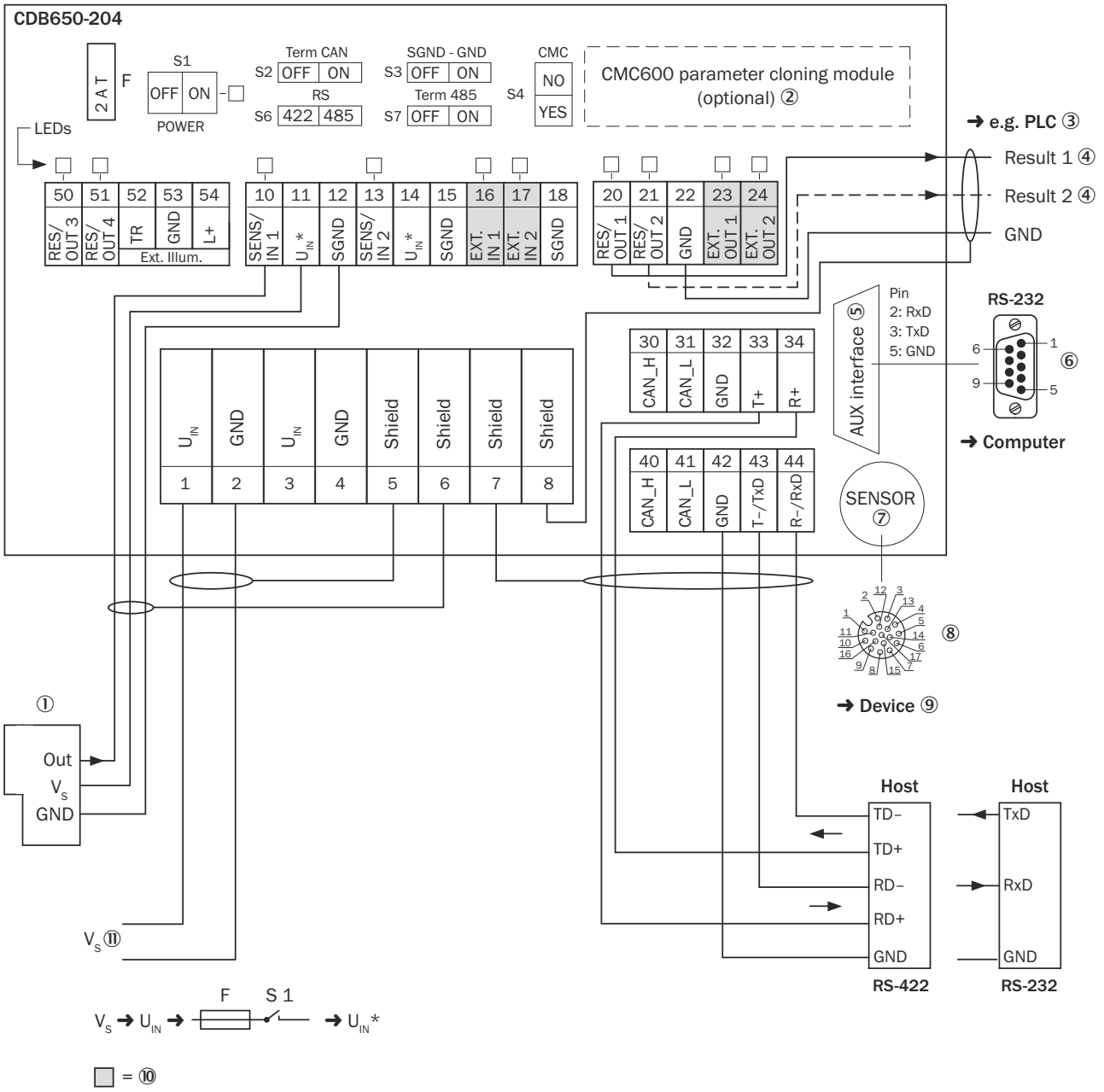

Figure 24: Connection of device and peripherals to the CDB650-204 connection module (overview).

① External trigger sensor
② CMC600 parameter cloning module (optional)
③ E.g., PLC (programmable logic controller)
④ Name of the digital output
⑤ Auxiliary interface “AUX”
⑥ Male connector, D-Sub, 9-pin
⑦ SENSOR = Device
⑧ Female connector, M12, 17-pin, A-coded
⑨ Device to be connected
⑩ The optional CMC600 parameter cloning module is required in the connection module in order to use the additional external digital inputs and outputs of the device (highlighted in gray).
⑪ Supply voltage V_S

13.2.3 Connecting supply voltage for the device in CDB650-204

Device = Lector64x = V2D63xx-xxxxAx

Device = Lector65x = V2D63xx-xxxxAx

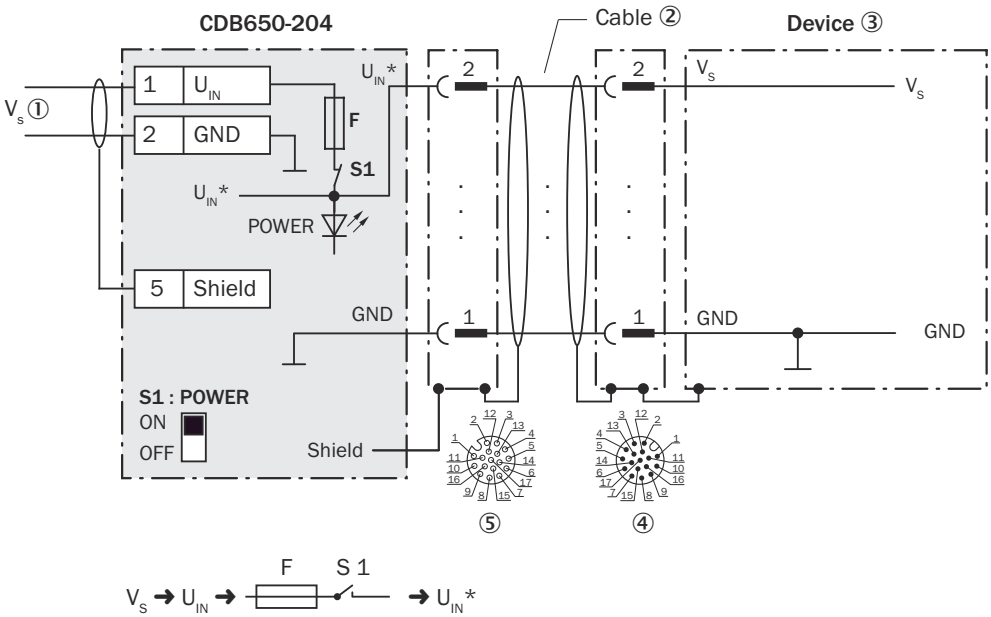

Figure 25: Connecting supply voltage for the device in CDB650-204 connection module.

① Supply voltage V_S

② Connection cable 1:1 with male connector, M12, 17-pin, A-coded and female connector, M12, 17-pin, A-coded

③ Device

④ Device: male connector, M12, 17-pin, A-coded

⑤ Connection module: female connector, M12, 17-pin, A-coded

Function of switch S1

Table 21: Switch S1: Power

Switch setting	Function
ON	Supply voltage U_{IN} connected to CDB650-204 and device via fuse and switch S1 as a supply voltage U_{IN}* Supply voltage U_{IN}* can be additionally tapped at terminals 11 and 14.
OFF	CDB650-204 and device disconnected from supply voltage Recommended setting for all connection work

13.2.4 Wiring serial host interface RS-232 of the device in CDB650-204

Device = Lector64x = V2D64xx-xxxxAx

Device = Lector65x = V2D65xx-xxxxAx

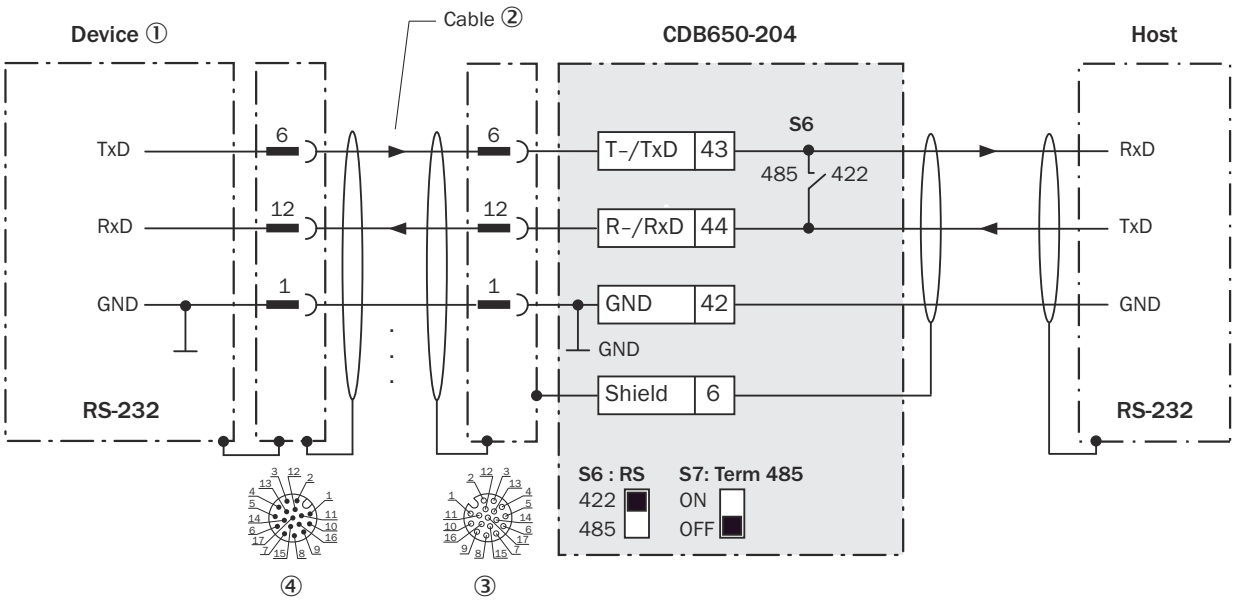

Figure 26: Wiring data interface RS-232 of the device in connection module CDB650-204.

① Device
② Connection cable 1:1 (female connector, M12, 17-pin, A-coded/male connector, M12, 17-pin, A-coded)
③ Connection module: female connector, M12, 17-pin, A-coded
④ Device: male connector, M12, 17-pin, A-coded

NOTE
Activate the RS-232 data interface in the device using a configuration software, e.g., SOPAS ET.

13.2.5 Wiring serial host interface RS-422 of the device in CDB650-204

Device = Lector64x = V2D64xx-xxxxAx

Device = Lector65x = V2D65xx-xxxxAx

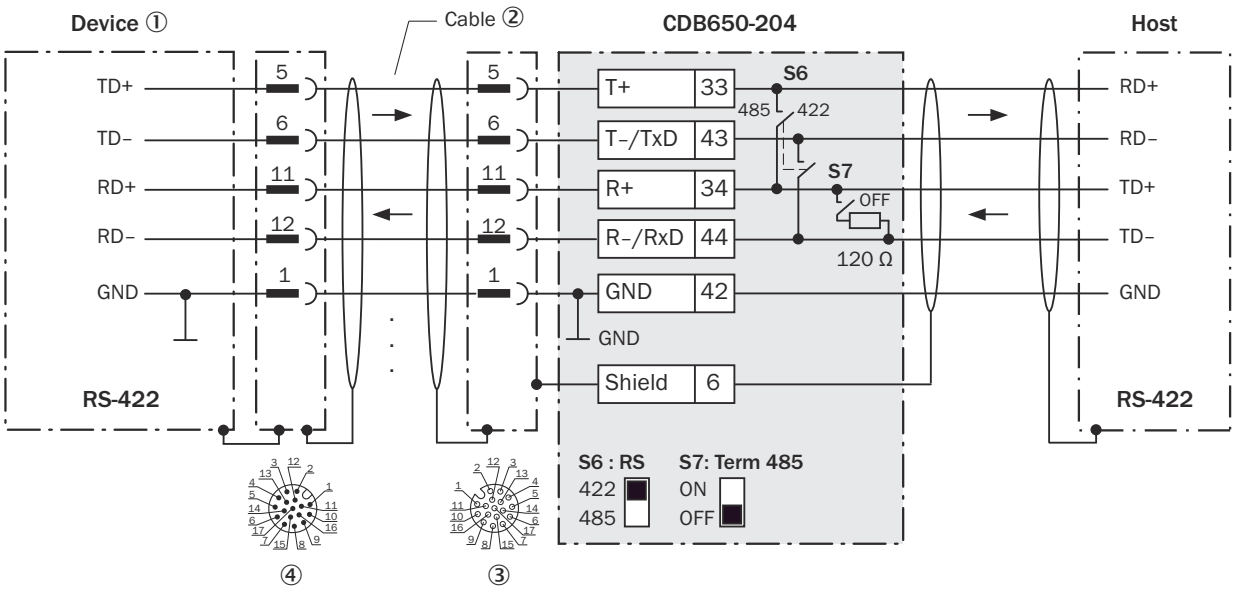

Figure 27: Wiring data interface RS-422 of the device in connection module CDB650-204.

① Device
② Connection cable 1:1 with female connector, M12, 17-pin, A-coded and male connector, M12, 17-pin, A-coded
③ Connection module: female connector, M12, 17-pin, A-coded
④ Device: male connector, M12, 17-pin, A-coded

Function of switch S7

Table 22: Switch S7: Term 485

Switch setting	Function
ON	Terminates the RS-422 receiver in the device to improve the noise ratio on the line
OFF	No termination

NOTE

User of the RS-422 data interface:

- The relevant interface drivers for the device comply with the standard in accordance with RS-422.
- The connection shown above is configured for operation of the host with permanently activated drivers (often described as “RS-422 operation”).
- Activate the RS-422 data interface (“Point-to-Point” option) in the device using a configuration software, e.g., SOPAS ET.

13.2.6 Wiring the CAN interface of the device in the CDB650-204

Device = Lector64x = V2D64xx-xxxxAx

Device = Lector65x = V2D65xx-xxxxAx

Not considered: connection and looping through of the supply voltage, connection of a trigger sensor for read cycle generation (e.g. at the CAN controller)

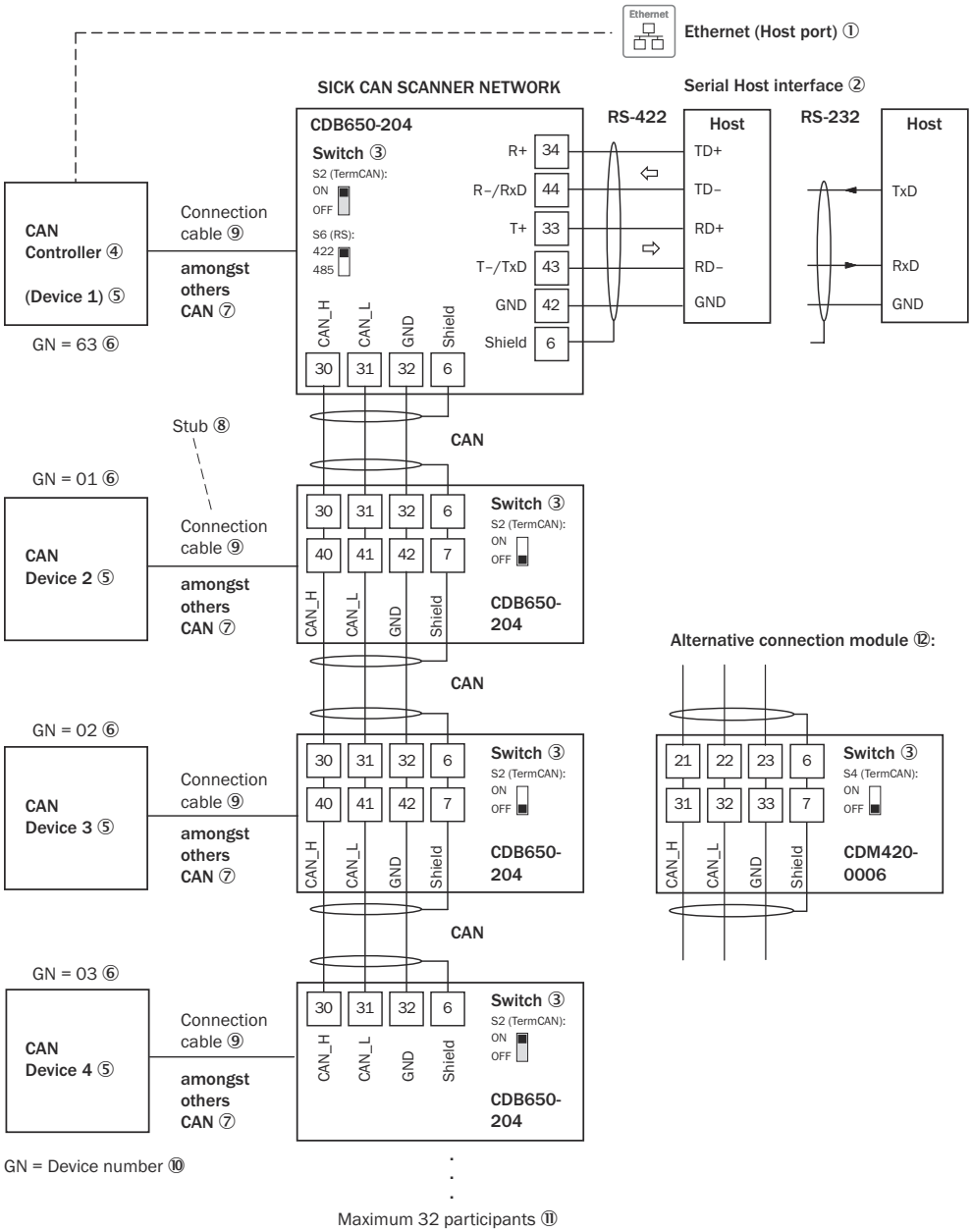

Figure 28: Wire the CAN interface of the device in the CDB650-204 connection module.

① Ethernet (host port)
② Serial host interface
③ Switch
④ CAN controller
⑤ CAN device
⑥ Device number
⑦ CAN etc.
⑧ Branch line
⑨ Connection cable 1:1 with female connector, M12, 17-pin, A-coded and male connector, M12, 17-pin, A-coded
⑩ Device number (GN)
⑪ Maximum 32 users
⑫ Example of alternative connection module CDM420-0006

An adapter cable with female connector, M12, 17-pin, A-coded and male connector, D-Sub-HD, 15-pin is required to connect the device.

NOTE
Activate the CAN data interface in the device using a configuration software, e.g., SOPAS ET.

Configure further settings in the device according to the function of the device in the system configuration.

13.2.7 Wiring digital inputs of the device in the CDB650-204

Device = Lector64x = V2D64xx-xxxxAx

Device = Lector65x = V2D65xx-xxxxAx

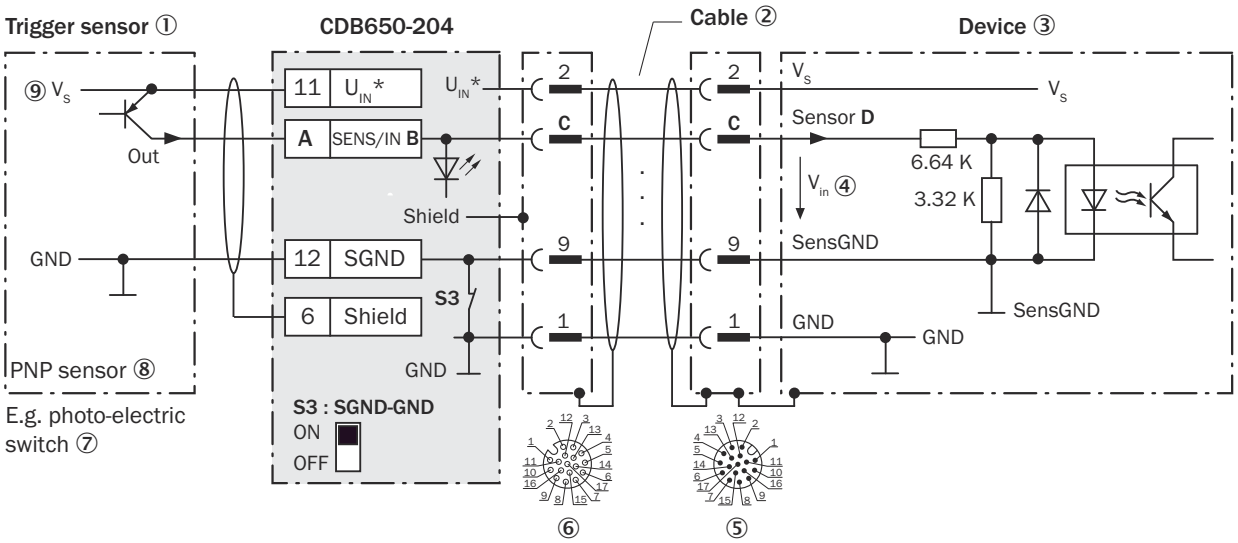

Figure 29: Trigger sensor supplied with power by connection module CDB650-204.

① Trigger sensor
② Connection cable 1:1 with female connector, M12, 17-pin, A-coded and male connector, M12, 17-pin, A-coded
③ Device
④ Input voltage V_{in}
⑤ Device: male connector, M12, 17-pin, A-coded
⑥ Connection module: female connector, M12, 17-pin, A-coded
⑦ E.g. photoelectric sensor
⑧ PNP sensor
⑨ Supply voltage V_S

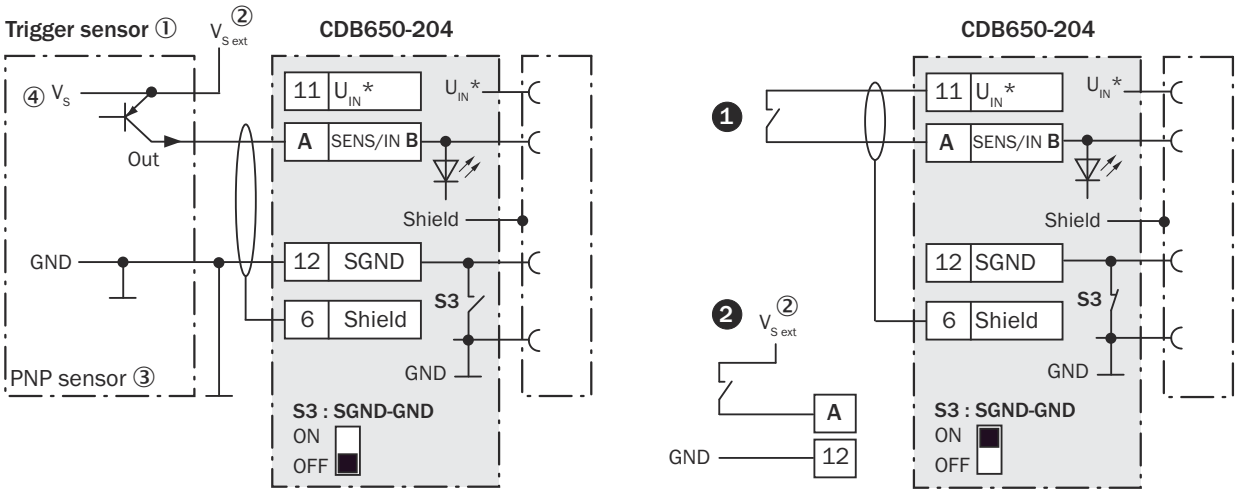

Figure 30: Left: Trigger sensor connected potential-free and supplied with power externally. Right: Alternatively switch, ❶ supplied with power by connection module CDB650-204 or ❷ connected potential-free and supplied with power externally. Now select switch setting S3 as shown in the left figure.

① Trigger sensor, e.g., for read cycle generation
② External supply voltage $V_{S\ ext}$
③ PNP sensor
④ Supply voltage V_S

Table 23: Assignment of placeholders to the digital inputs

CDB650-204			Device
Terminal A	**Signal B**	**Pin C**	**Sensor D**
10	SENS/IN 1	10	1
13	SENS/IN 2	15	2

Function of switch S3

Table 24: Switch S3: SGND-GND

Switch setting	Function
ON	GND of the trigger sensor is connected with GND of CDB650-204 and GND of the device
OFF	Trigger sensor is connected volt-free at CDB650-204 and the device. Common, isolated reference potential of all digital inputs is SGND.

Characteristic data of the digital inputs

Table 25: Characteristic data of the digital inputs “Sensor 1” and “Sensor 2”

Type	Switching

Switching behavior	Power to the input starts the assigned function, e.g. start read cycle. Default setting in the device: logic not inverted (active high), debounce time 10 ms
Properties	• Opto-decoupled, reverse polarity protected • Can be wired with PNP output of a trigger sensor
Electrical values	Low: V_{in} [1] ≤ 2 V; I_{in} [2] ≤ 0.3 mA High: 6 V ≤ V_{in} ≤ 30 V; 0.7 mA ≤ I_{in} ≤ 5 mA

1) Input voltage.
2) Input current.

NOTE
Assign the functions for the digital inputs in the device using a configuration software, e.g., SOPAS ET.

13.2.8 Wiring the external digital inputs of the device in the CDB650-204

Device = Lector64x = V2D64xx-xxxxAx

Device = Lector65x = V2D65xx-xxxxAx

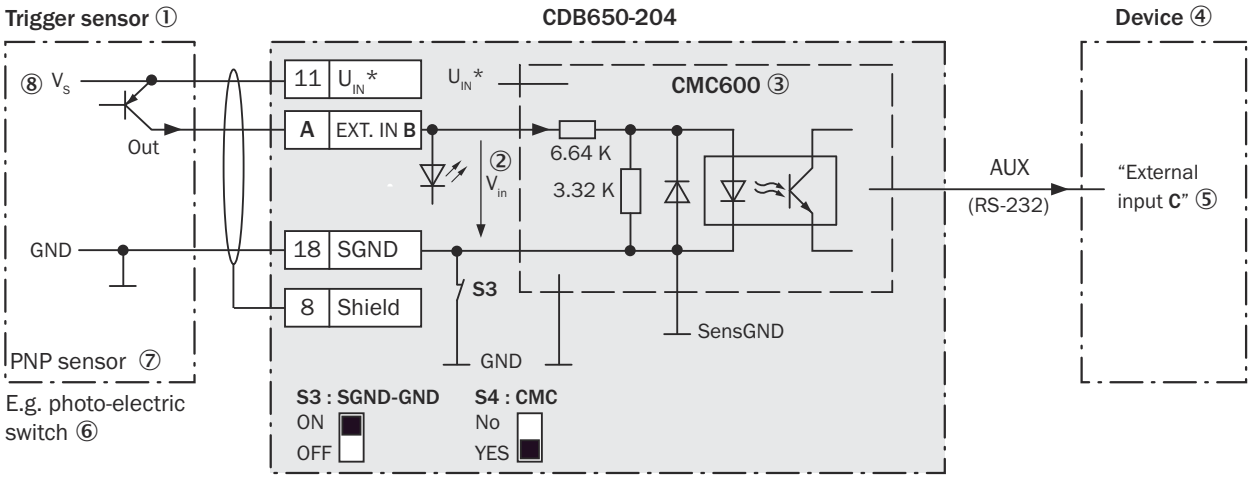

Figure 31: Trigger sensor supplied with power by connection module CDB650-204

① Trigger sensor
② Input voltage V_{in}
③ The optional CMC600 parameter cloning module is required in the connection module in order to use the additional external digital inputs and digital outputs of the device.
④ Device
⑤ Logical "External input" in the device
⑥ E.g. photoelectric sensor
⑦ PNP sensor
⑧ Supply voltage V_S

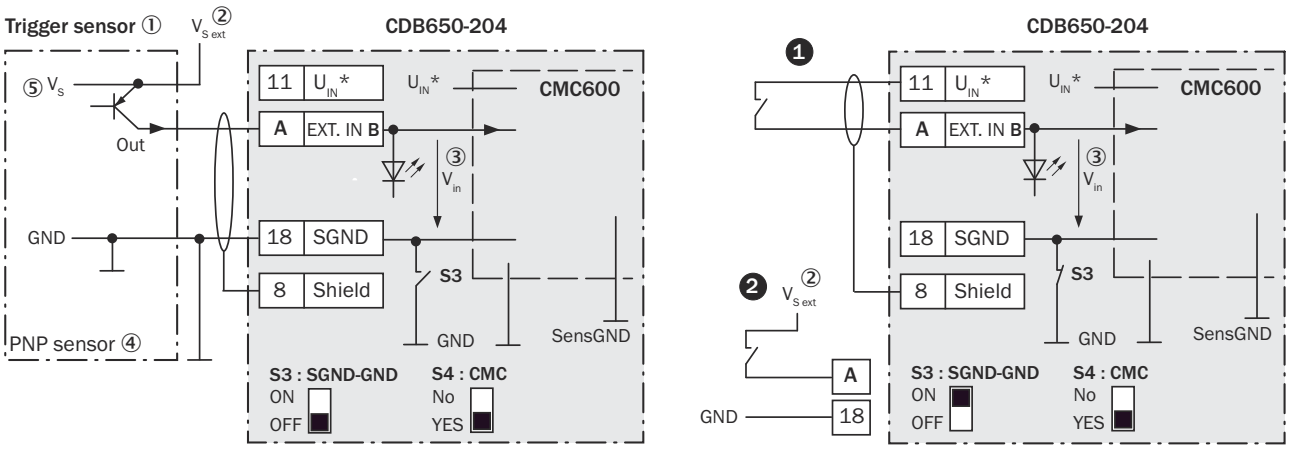

Figure 32: Left: Trigger sensor connected potential-free and supplied with power externally. Right: Alternatively switch, ❶ supplied with power by connection module CDB650-204 or ❷ connected potential-free and supplied with power externally. Switch setting S3 then as in left figure.

① Trigger sensor, e.g. for read cycle generation
② External supply voltage $V_{S\ ext}$
③ Input voltage V_{in}
④ PNP sensor
⑤ Supply voltage V_S

Table 26: Assignment of placeholders to the external digital inputs

CDB650-204 (physical inputs)		Device (logical inputs)
Terminal A	**Signal B**	**External input C**
16	EXT. IN 1	1
17	EXT. IN 2	2

Function of switch S3

Table 27: Switch S3: SGND - GND

Switch setting	Function
ON	GND of the trigger sensor connected with GND of CDB650-204 and CMC600
OFF	Trigger sensor connected volt-free at CDB650-204 and CMC600 Common, isolated reference potential of all digital inputs is SGND.

Functional principle of the external digital inputs

The optional CMC600 parameter cloning module in combination with the CDB or CDM connection module offers two additional physical digital inputs for the device. The inputs are available at the respective terminals of the connection module. To distinguish them from the physical digital inputs directly on the device, these addition inputs via the CMC600 are designated as “external inputs”.

NOTE
The CMC600 transmits the switching signals of the external digital inputs as statuses to the local inputs of the device via its serial data interface.
The digital inputs are not suitable for time-critical applications.

Characteristic data of the digital inputs

Table 28: Characteristic data of the digital inputs “External input 1” and “External input 2”

Type	Switching
Switching behavior	Power to the input starts the assigned function, e.g. start read cycle. Default setting in the device: logic not inverted (active high), debounce time 10 ms
Properties	• Opto-decoupled, reverse polarity protected • Can be wired with PNP output of a trigger sensor
Electrical values	Low: V_{in} [1] ≤ 2 V; I_{in} [2] ≤ 0.3 mA High: 6 V ≤ V_{in} ≤ 30 V; 0.7 mA ≤ I_{in} ≤ 5 mA

1) Input voltage.
2) Input current.

NOTE
Assign the functions for the external digital inputs in the device using a configuration software, e.g., SOPAS ET.

13.2.9 Wiring digital outputs of the device in the CDB650-204

Device = Lector64x = V2D64xx-xxxxAx

Device = Lector65x = V2D65xx-xxxxAx

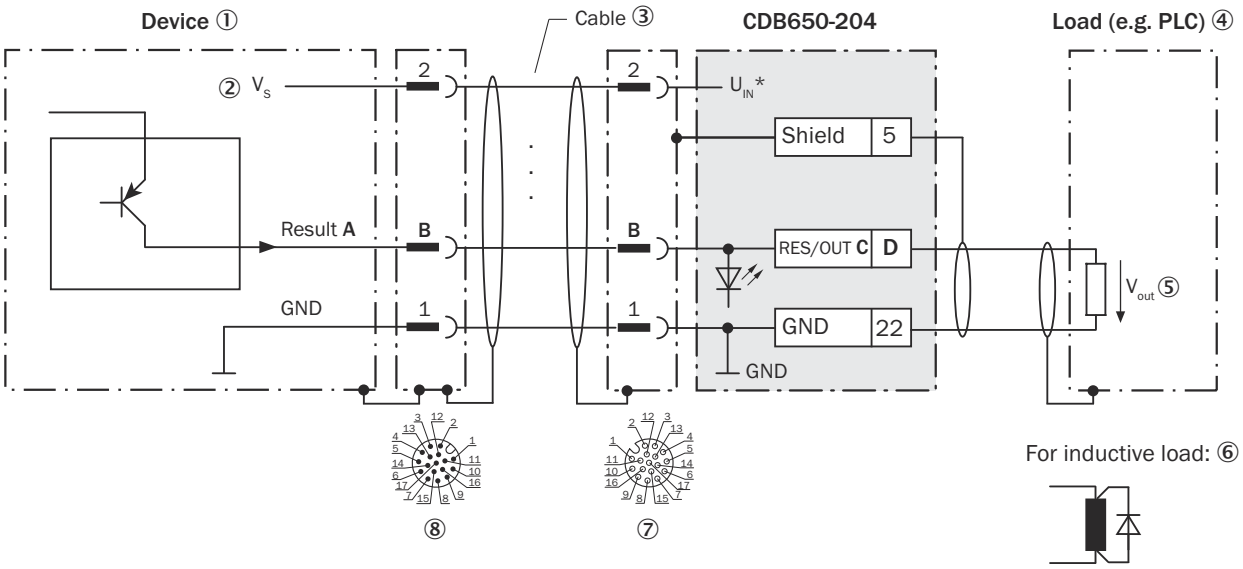

Figure 33: Wire the digital output in the CDB650-204 connection module.

① Device
② Supply voltage V_S
③ Connection cable 1:1 with female connector, M12, 17-pin, A-coded and male connector, M12, 17-pin, A-coded
④ Load (e.g. PLC)
⑤ Output voltage V_{out}
⑥ With inductive load: see note
⑦ Connection module: female connector, M12, 17-pin, A-coded
⑧ Device: male connector, M12, 17-pin, A-coded

Inductive load

NOTE
Provide an arc-suppression switch at the digital output if inductive load is present.

► Attach a freewheeling diode directly to the load for this purpose.

Table 29: Assignment of placeholders to the digital outputs

Device		CDB650-204	
Output A	**Pin B**	**Signal C**	**Terminal D**
Result 1	13	RES/OUT 1	20
Result 2	14	RES/OUT 2	21
Result 3	16	RES/OUT 3	50
Result 4	17	RES/OUT 4	51

Characteristic data of the digital outputs

Table 30: Characteristic data of the digital switching outputs

Type	Switching
Switching behavior	PNP switching to supply voltage V_S Default settings in the device: no function, logic: not inverted (active high)
Properties	• Short-circuit protected and temperature protected • Not electrically isolated from V_S
Electrical values	$0\ V \leq V_{out}$ [1] $\leq V_S$ $(V_S - 1.5\ V) \leq V_{out} \leq V_S$ at I_{out} [2] $\leq 100\ mA$

1) Output voltage.
2) Output current.

NOTE
Allocate the functions for the digital outputs in the device using a configuration software, e.g., SOPAS ET.

13.2.10 Wiring the external digital outputs of the device in the CDB650-204

Device = Lector64x = V2D64xx-xxxxAx

Device = Lector65x = V2D653xx-xxxxAx

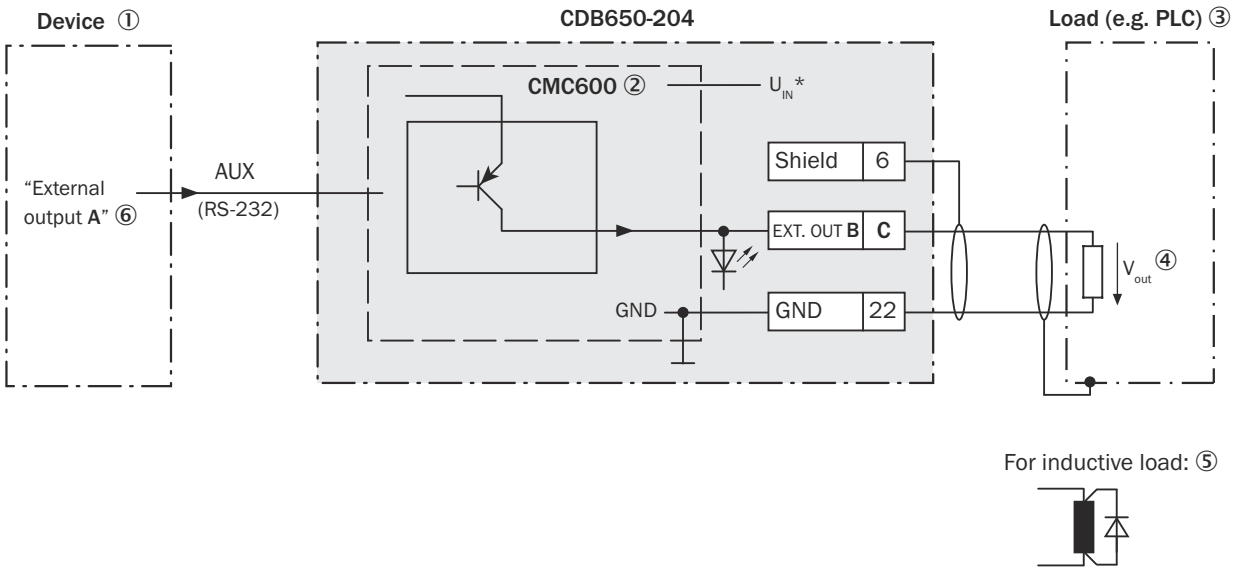

Figure 34: Wiring external "External output 1" and "External output 2" digital outputs of the device in the CDB650-204 connection module.

① Device

② The optional CMC600 parameter cloning module is required in the connection module in order to use the additional external digital inputs and digital outputs of the device.

③ Load (e.g. PLC)

④ Output voltage V_{out}

⑤ With inductive load: see note

⑥ Logical "External output" in the device

Inductive load

NOTE

Provide an arc-suppression switch at the digital output if inductive load is present.

► Attach a freewheeling diode directly to the load for this purpose.

Table 31: Assignment of placeholders to the digital outputs

Device (logical output)	CDB650-204 (physical output)	
External output A	**Signal B**	**Terminal C**
1	EXT. OUT 1	23
2	EXT. OUT 2	24

Functional principle of the external digital outputs

The optional CMC600 parameter cloning module in combination with the CDB or CDM connection module offers two additional digital outputs for the device. The outputs are available at the respective terminals of the connection module. To distinguish them from the physical digital outputs directly on the device, these addition outputs via the CMC600 are designated as "external outputs".

NOTE
The device transmits the statuses of its logical outputs to the CMC600 via its serial data interface. The CMC600 converts the statuses into switching signals on its physical digital outputs.

The digital outputs are not suitable for time-critical applications.

Characteristic data of the digital outputs

Table 32: Characteristic data of the digital outputs "External output 1" and "External output 2"

Type	Switching
Switching behavior	PNP switching to supply voltage V_S Default settings in the device: no function, logic: not inverted (active high)
Properties	• Short-circuit protected and temperature protected • Not electrically isolated from the supply voltage V_S
Electrical values	$0\ V \leq V_{out}$ [1] $\leq V_S$ $(V_S - 1.5\ V) \leq V_{out} \leq V_S$ at I_{out}[2] $\leq 100\ mA$

1) Output voltage.
2) Output current.

NOTE
Assign the functions for the external digital outputs in the device using a configuration software, e.g., SOPAS ET.

13.3 Connection diagrams of connection module CDM420-0006

13.3.1 Connection of the device to CDM420-0006

Device = Lector64x = V2D64xx-xxxxAx

Device = Lector65x = V2D65xx-xxxxAx

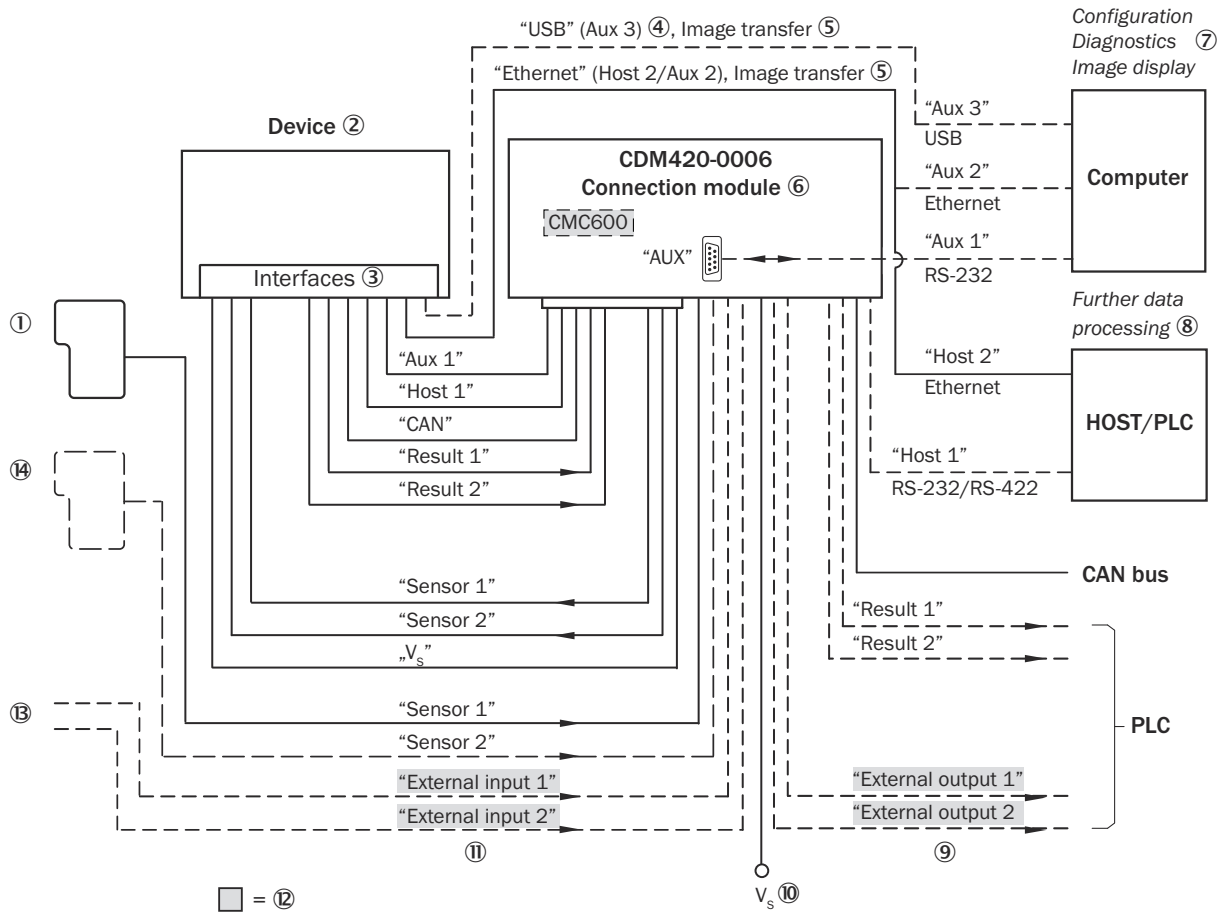

Figure 35: Connection of the device (Ethernet variant) to peripherals via CDM420-0006 (overview)

① External trigger sensor
② Device
③ Interfaces
④ USB interface, for temporary use as a servicing interface only
⑤ Image transmission
⑥ Connection modules
⑦ Configuration, diagnostics or image display
⑧ Data further processing
⑨ External digital outputs
⑩ Supply voltage V_S
⑪ External digital inputs
⑫ The optional CMC600 parameter cloning module is required in the connection module in order to use the additional external digital inputs and outputs of the device (highlighted in gray).
⑬ Other functions
⑭ Application-dependent alternative stop trigger (e.g., photoelectric sensor) or travel increment (incremental encoder)

13.3.2 Wiring overview of the CDM420-0006

Device = Lector64x = V2D64xx-xxxxAx

Device = Lector65x = V2D65xx-xxxxAx

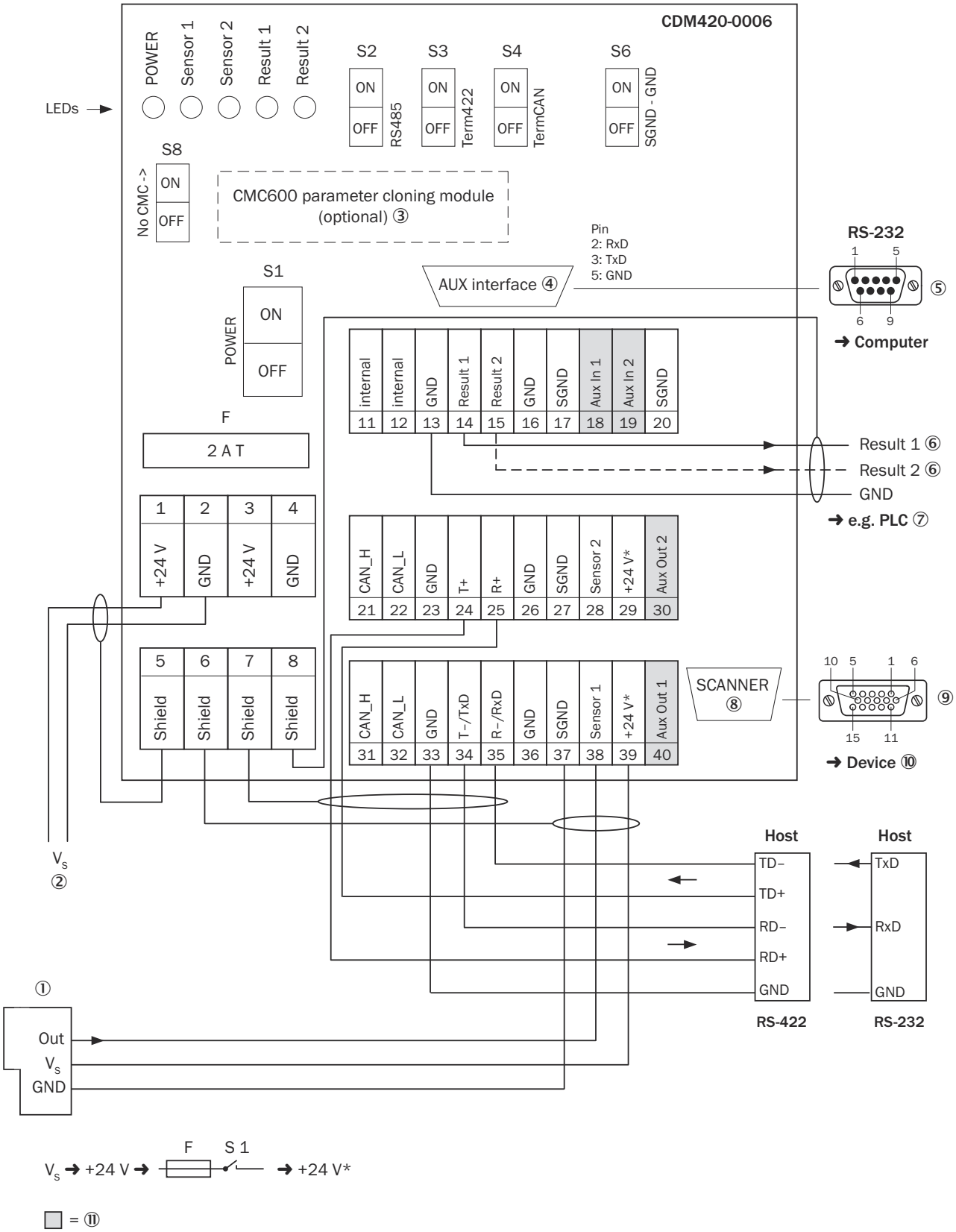

Figure 36: Connection of device and peripherals to the CDM420-0006 connection module (overview).

① External trigger sensor
② Supply voltage V_S
③ CMC600 parameter cloning module (optional)
④ Auxiliary interface “AUX”
⑤ Male connector, D-Sub, 9-pin
⑥ Name of the digital output
⑦ E.g., PLC (programmable logic controller)
⑧ SCANNER = Device
⑨ Female connector, D-Sub-HD, 15-pin
⑩ Device to be connected
⑪ The optional CMC600 parameter cloning module is required in the connection module in order to use the additional external digital inputs and outputs of the device (highlighted in gray).

13.3.3 Connecting supply voltage for the device in CDM420-0006

Device = Lector64x = V2D64xx-xxxxAx

Device = Lector65x = V2D65xx-xxxxAx

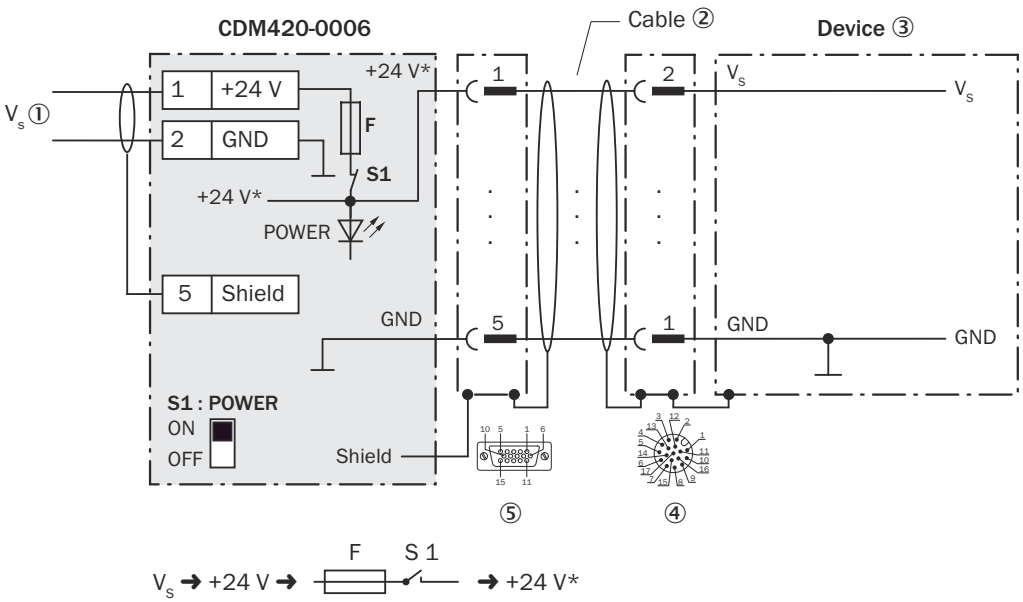

Figure 37: Connecting supply voltage for the device in CDM420-0006 connection module.

① Supply voltage V_S
② Adapter cable with male connector, D-Sub-HD, 15-pin and female connector, M12, 17-pin, A-coded
③ Device
④ Device: male connector, M12, 17-pin, A-coded
⑤ Connection module: female connector, D-Sub-HD, 15-pin

Function of switch S1

Table 33: Switch S1: Power

Switch setting	Function
ON	Supply voltage +24 V connected to CDM420-0006 and device via fuse as +24 V* supply voltage Supply voltage +24 V* can be additionally tapped at terminals 29 and 39

Switch setting	Function
OFF	CDM420-0006 and device disconnected from supply voltage Recommended setting for all connection work

13.3.4 Wiring serial host interface RS-232 of the device in the CDM420-0006

Device = Lector64x = V2D64xx-xxxxAx

Device = Lector65x = V2D65xx-xxxxAx

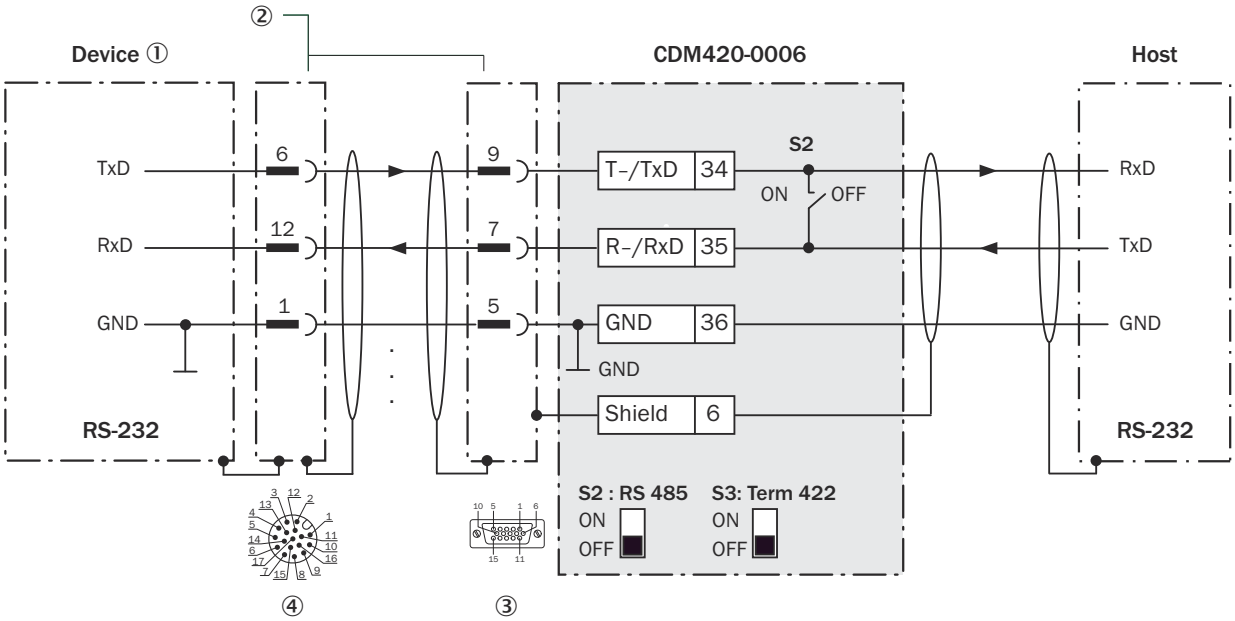

Figure 38: Wiring data interface RS-232 of the device in connection module CDM420-0006.

① Device
② Adapter cable with male connector, D-Sub-HD, 15-pin and female connector, M12, 17-pin, A-coded
③ Connection module: female connector, D-Sub-HD, 15-pin
④ Device: male connector, M12, 17-pin, A-coded

NOTE
Activate the RS-232 data interface in the device using a configuration software, e.g., SOPAS ET.

13.3.5 Wiring serial host interface RS-422 of the device in the CDM420-0006

Device = Lector64x = V2D64xx-xxxxAx

Device = Lector65x = V2D65xx-xxxxAx

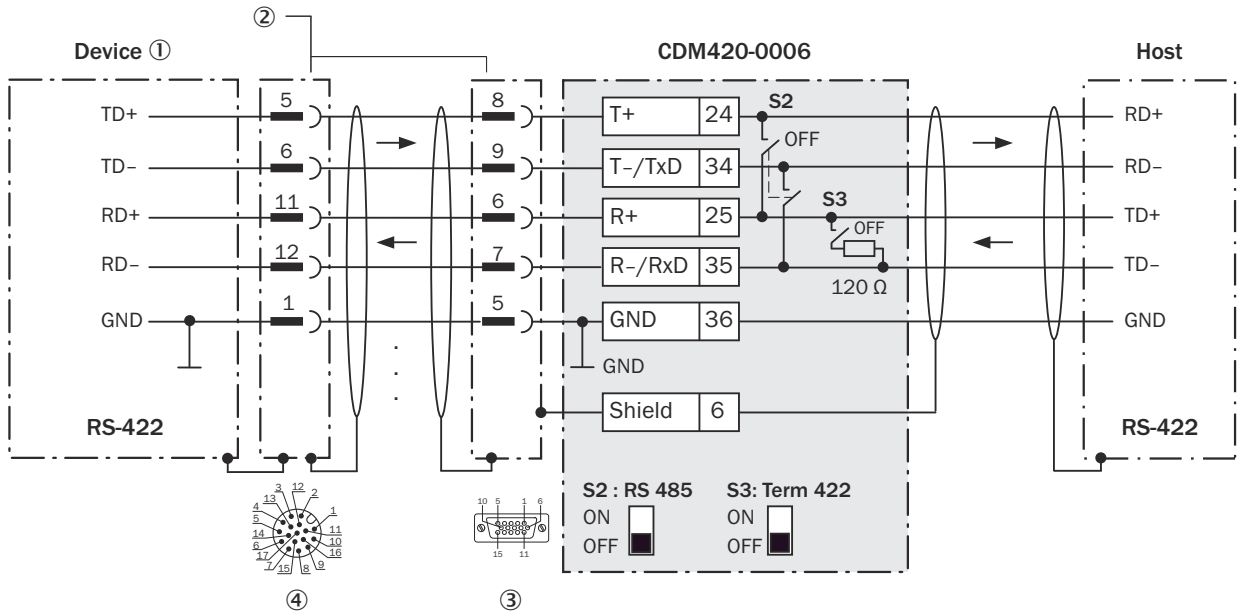

Figure 39: Wiring data interface RS-422 of the device in connection module CDM420-0006.

① Device
② Adapter cable with male connector, D-Sub-HD, 15-pin and female connector, M12, 17-pin, A-coded
③ Connection module: female connector, D-Sub-HD, 15-pin
④ Device: male connector, M12, 17-pin, A-coded

Function of switch S3

Table 34: Switch S3: Term 422

Switch setting	Function
ON	Terminates the RS-422 receiver in the device to improve the noise ratio on the line
OFF	No termination

NOTE
Activate the RS-422 data interface (“Point-to-Point” option) in the device using a configuration software, e.g., SOPAS ET.

The requirements and restrictions apply when using the RS-422 data interface:

- The relevant interface drivers for the device comply with the standard in accordance with RS-422.
- The connection shown above is configured for operation of the host with permanently activated drivers, often described as “RS-422 operation”.

13.3.6 Wiring the CAN interface of the device in the CDM420-0006

Device = Lector64x = V2D64xx-xxxxAx

Device = Lector65x = V2D65xx-xxxxAx

Not considered: connection and looping through of the supply voltage, connection of a trigger sensor for read cycle generation (e.g. at the CAN controller)

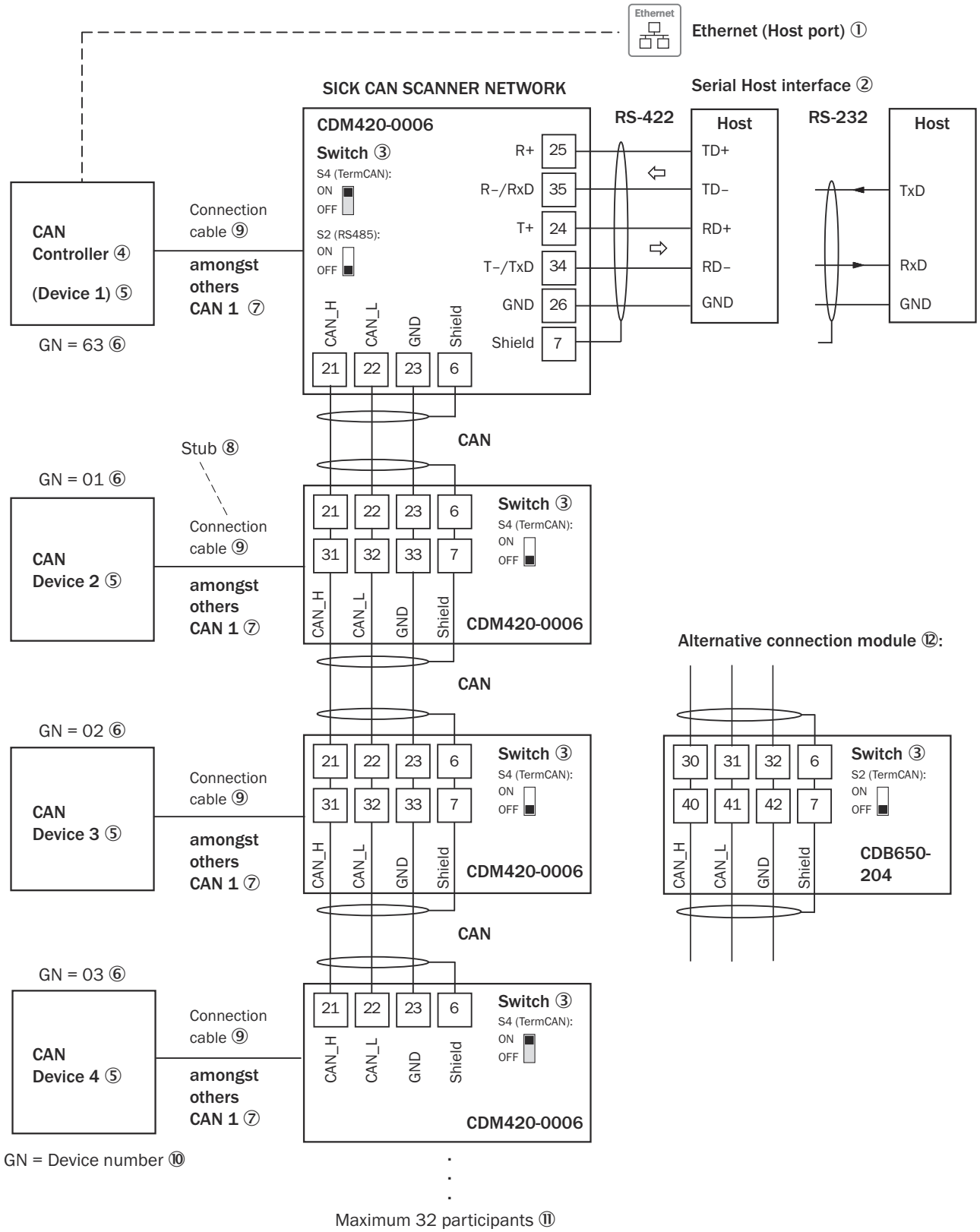

Figure 40: Wire the CAN interface of the device in the CDM420-0006 connection module.

① Ethernet (host port)
② Serial host interface
③ Switch
④ CAN controller
⑤ CAN device
⑥ Device number
⑦ CAN etc.
⑧ Branch line
⑨ Adapter cable with female connector, M12, 17-pin, A-coded and male connector, D-Sub-HD, 15-pin
⑩ Device number (GN)
⑪ Maximum 32 users
⑫ Example of alternative connection module:

CDB650-204

A connection cable 1:1 with female connector, M12, 17-pin, A-coded and male connector, M12, 17-pin, A-coded is required to connect the device.

NOTE
Activate the CAN data interface in the device using a configuration software, e.g., SOPAS ET.
Configure further settings in the device according to the function of the device in the system configuration.

13.3.7 Wiring digital inputs of the device in the CDM420-0006

Device = Lector64x = V2D64xx-xxxxAx

Device = Lector65x = V2D65xx-xxxxAx

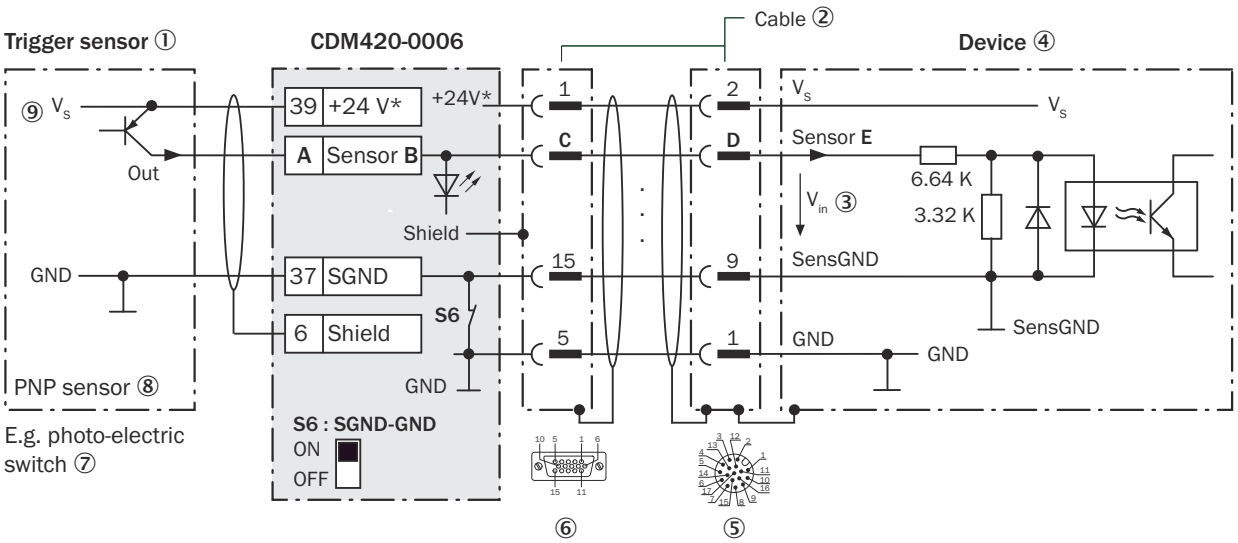

Figure 41: Trigger sensor supplied with power by connection module CDM420-0006

① Trigger sensor
② Adapter cable with male connector, D-Sub-HD, 15-pin and female connector, M12, 17-pin, A-coded
③ Input voltage V_{in}
④ Device
⑤ Device: male connector, M12, 17-pin, A-coded
⑥ Connection module: female connector, M12, 17-pin, A-coded
⑦ E.g. photoelectric sensor
⑧ PNP sensor
⑨ Supply voltage V_S

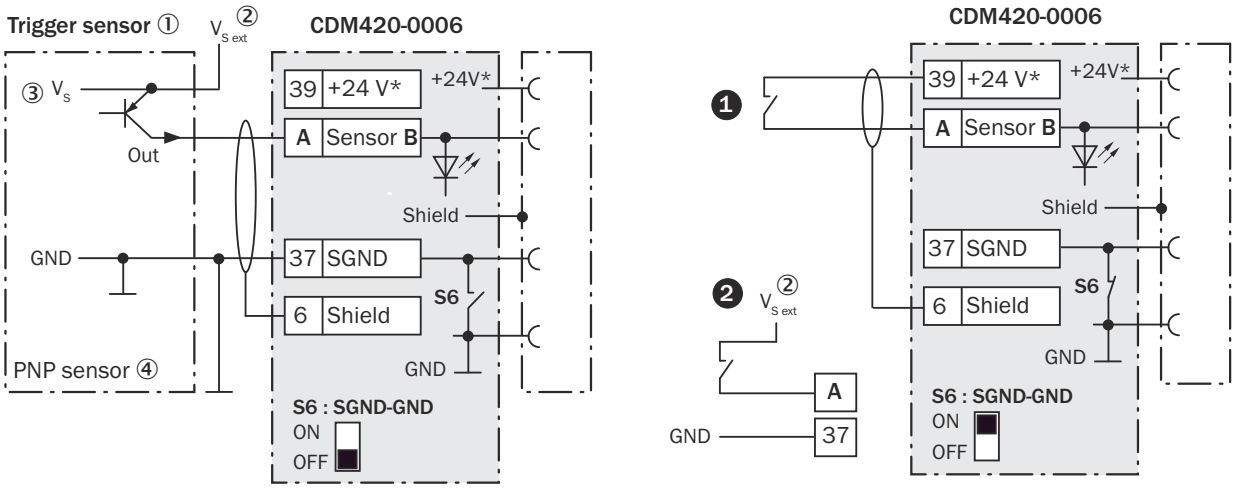

Figure 42: Left: Trigger sensor connected potential-free and supplied with power externally. Right: Alternatively switch, ❶ supplied with power by connection module CDM420-0006 or ❷ connected potential-free and supplied with power externally. Now select switch setting S6 as shown in the left figure.

① Trigger sensor, e.g. for read cycle generation
② External supply voltage $V_{S\ ext}$
③ Supply voltage V_S
④ PNP sensor

Table 35: Assignment of placeholders to the digital inputs

CDM420-0006			Device	
Terminal A	**Signal B**	**Pin C**	**Pin D**	**Sensor E**
38	Sensor 1	14	10	1
28	Sensor 2	4	15	2

Function of switch S6

Table 36: Switch S6: SGND - GND

Switch setting	Function
ON	GND of the trigger sensor is connected with GND of CDM420-0006 and GND of the device
OFF	Trigger sensor is connected volt-free at CDM420-0006 and the device. Common, isolated reference potential of all digital inputs is SGND.

Characteristic data of the digital inputs

Table 37: Characteristic data of the digital inputs “Sensor 1” and “Sensor 2”

Type	Switching

Switching behavior	Power to the input starts the assigned function, e.g. start read cycle. Default setting in the device: logic not inverted (active high), debounce time 10 ms
Properties	• Opto-decoupled, reverse polarity protected • Can be wired with PNP output of a trigger sensor
Electrical values	Low: V_{in}[1] ≤ 2 V; I_{in}[2] ≤ 0.3 mA High: 6 V ≤ V_{in} ≤ 30 V; 0.7 mA ≤ I_{in} ≤ 5 mA

1) Input Voltage
2) Input current

NOTE
Allocate the functions for the digital inputs in the device using a configuration software, e.g., SOPAS ET.

13.3.8 Wiring the external digital inputs of the device in the CDM420-0006

Device = Lector64x = V2D64xx-xxxxAx

Device = Lector65x = V2D65xx-xxxxAx

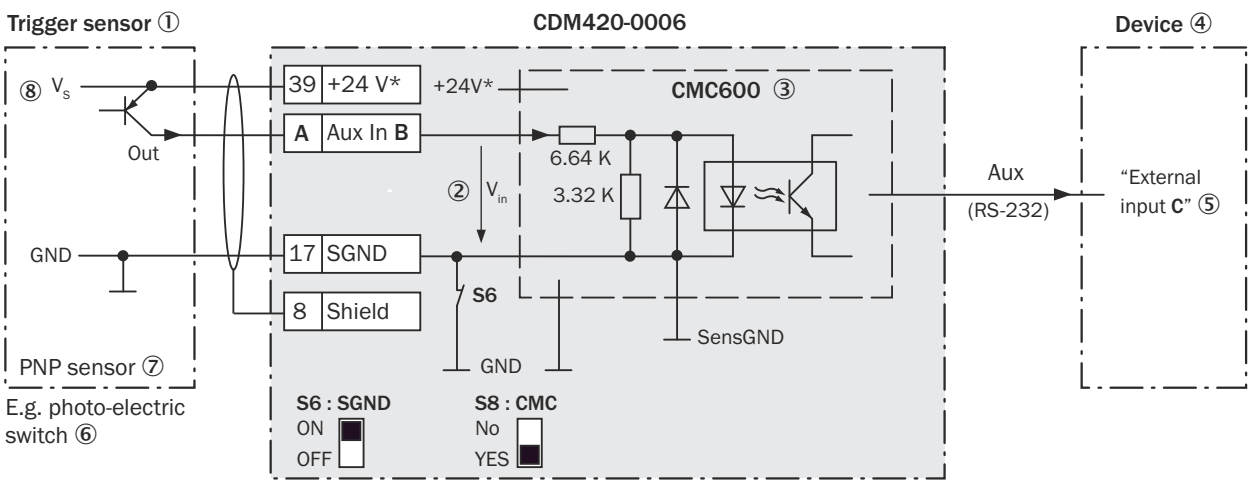

Figure 43: Trigger sensor supplied with power by connection module CDM420-0006

① Trigger sensor, e.g. for read cycle generation
② Input voltage V_{in}
③ The optional CMC600 parameter cloning module is required in the connection module in order to use the additional external digital inputs and outputs of the device.
④ Device
⑤ Logical "External input" in the device
⑥ e.g. photoelectric sensor
⑦ PNP sensor
⑧ Supply voltage V_S

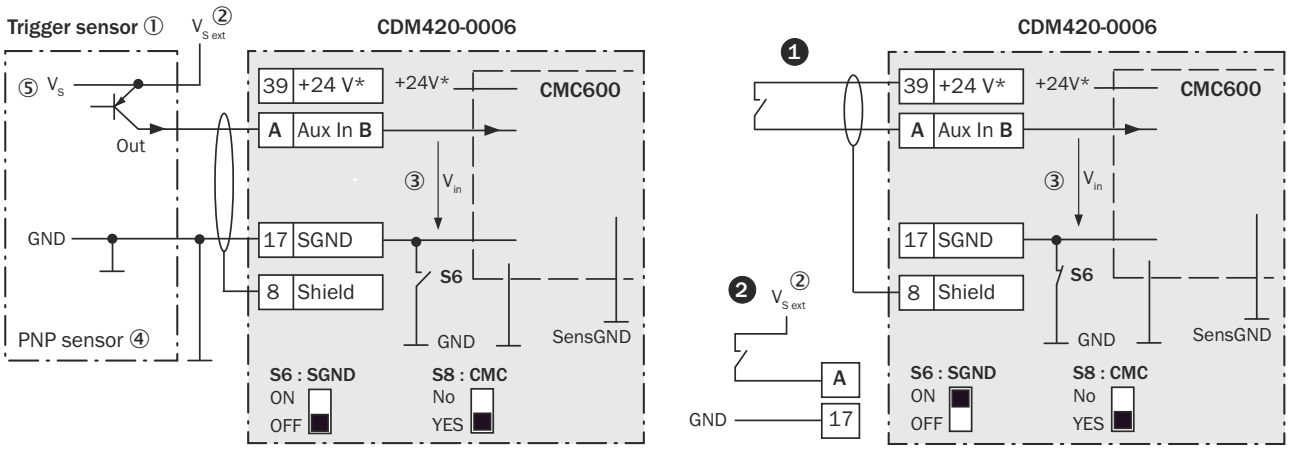

Figure 44: Left: Trigger sensor connected potential-free and supplied with power externally. Right: Alternatively switch, ❶ supplied with power by connection module CDM420-0006 or ❷ connected potential-free and supplied with power externally. Switch setting S3 then as in left figure.

① Trigger sensor, e.g. for read cycle generation
② External supply voltage $V_{S\ ext}$
③ Input voltage V_{in}
④ PNP sensor
⑤ Supply voltage V_S

Table 38: Assignment of placeholders to the digital inputs

CDM420-0006		Device
Terminal A	**Signal B**	**External input C**
18	Aux In 1	1
19	Aux In 2	2

Function of switch S6

Table 39: Switch S6: SGND - GND

Switch setting	Function
ON	GND of the trigger sensor connected with GND of CDM420-0006 and CMC600
OFF	Trigger sensor connected volt-free at CDM420-0006 and CMC600 Common, isolated reference potential of all digital inputs is SGND.

Functional principle of the external digital inputs

The optional CMC600 parameter cloning module in combination with the CDB or CDM connection module offers two additional physical digital inputs for the device. The inputs are available at the respective terminals of the connection module. To distinguish them from the physical digital inputs directly on the device, these addition inputs via the CMC600 are designated as “external inputs”.

NOTE
The CMC600 transmits the switching signals of the external digital inputs as statuses to the local inputs of the device via its serial data interface.
The digital inputs are not suitable for time-critical applications.

Characteristic data of the digital inputs

Table 40: Characteristic data of the digital inputs “External input 1” and “External input 2”

Type	Switching
Switching behavior	Power to the input starts the assigned function, e.g. start read cycle. Default setting in the device: logic not inverted (active high), debounce time 10 ms
Properties	• Opto-decoupled, reverse polarity protected • Can be wired with PNP output of a trigger sensor
Electrical values	Low: V_{in}[1] ≤ 2 V; I_{in}[2] ≤ 0.3 mA High: 6 V ≤ V_{in} ≤ 30 V; 0.7 mA ≤ I_{in} ≤ 5 mA

1) Input voltage.
2) Input current.

NOTE
Allocate the functions for the digital inputs in the device using a configuration software, e.g., SOPAS ET.

13.3.9 Wiring digital outputs of the device in the CDM420-0006

Device = Lector64x = V2D64xx-xxxxAx

Device = Lector65x = V2D65xx-xxxxAx

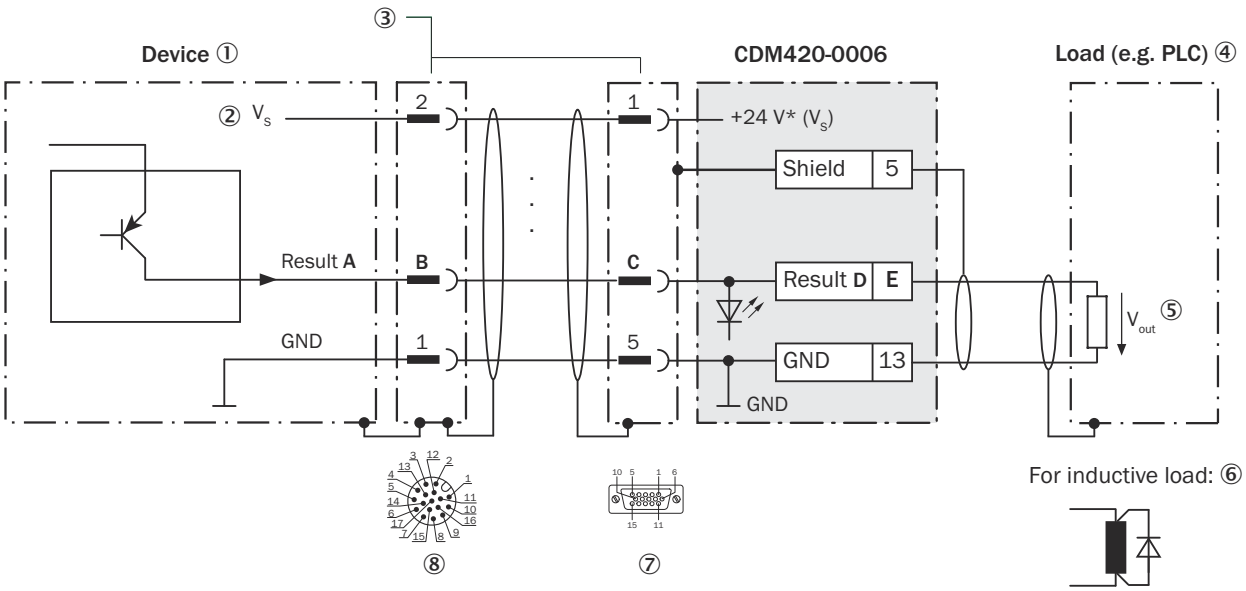

Figure 45: Wire the digital output in the CDM420-0006 connection module.

① Device
② Supply voltage V_S
③ Adapter cable with female connector, M12, 17-pin, A-coded and male connector, D-Sub-HD, 15-pin
④ Load (e.g. PLC)
⑤ Output voltage V_{out}
⑥ With inductive load: see note
⑦ Connection module: female connector, D-Sub-HD, 15-pin
⑧ Device: male connector, M12, 17-pin, A-coded

NOTE
Digital outputs are omitted due to the 15-pin adapter cable.

Not available in CDM420-0006:
- Result 3
- Result 4

Inductive load

NOTE
Provide an arc-suppression switch at the digital output if inductive load is present.

► Attach a freewheeling diode directly to the load for this purpose.

Table 41: Assignment of placeholders to the digital outputs

Device		CDM420-0006		
Output A	**Pin B**	**Pin C**	**Signal D**	**Terminal E**
Result 1	13	12	Result 1	14
Result 2	14	13	Result 2	15

Characteristic data of the digital outputs

Table 42: Characteristic data of the and digital outputs

Type	Switching
Switching behavior	PNP switching to supply voltage V_S Default settings in the device: no function, logic: not inverted (active high)
Properties	• Short-circuit protected and temperature protected • Not electrically isolated from the supply voltage V_S
Electrical values	$0\ V \leq V_{out}$[1] $\leq V_S$ $(V_S - 1.5\ V) \leq V_{out} \leq V_S$ at I_{out}[2] $\leq 100\ mA$

1) Output voltage.
2) Output current.

NOTE
Allocate the functions for the digital outputs in the device using a configuration software, e.g., SOPAS ET.

13.3.10 Wiring the external digital outputs of the device in the CDM420-0006

Device = Lector64x = V2D64xx-xxxxAx

Device = Lector65x = V2D65xx-xxxxAx

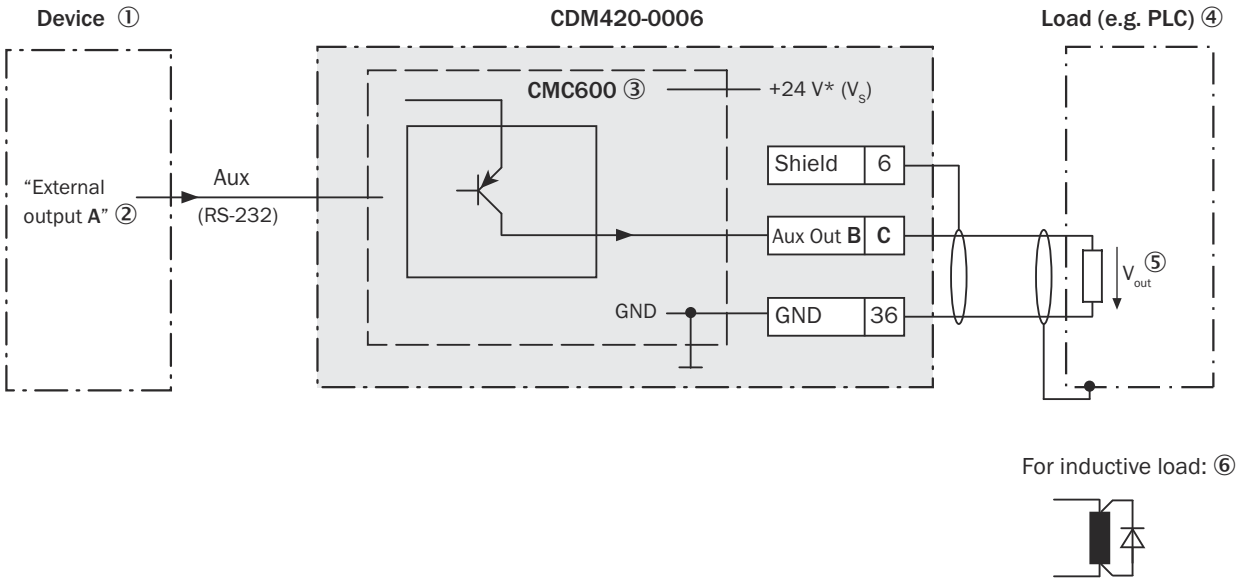

Figure 46: Wiring "Aux Out 1" and "Aux Out 2" external digital outputs of the device in the connection module CDM420-0006.

① Device
② Logical "External output" in the device
③ The optional CMC600 parameter cloning module is required in the connection module in order to use the additional external digital inputs and outputs of the device.
④ Load (e.g. PLC)
⑤ Output voltage V_{out}
⑥ With inductive load: see note

Inductive load

NOTE
Provide an arc-suppression switch at the digital output if inductive load is present.

► Attach a freewheeling diode directly to the load for this purpose.

Table 43: Assignment of placeholders to the external digital outputs

Device	CDM420-0006	
External output A	**Signal B**	**Terminal C**
1	Aux Out 1	40
2	Aux Out 2	30

Functional principle of the external digital outputs

The optional CMC600 parameter cloning module in combination with the CDB or CDM connection module offers two additional digital outputs for the device. The outputs are available at the respective terminals of the connection module. To distinguish them from the physical digital outputs directly on the device, these addition outputs via the CMC600 are designated as "external outputs".

NOTE
The device transmits the statuses of its logical outputs to the CMC600 via its serial data interface. The CMC600 converts the statuses into switching signals on its physical digital outputs.
The digital outputs are not suitable for time-critical applications.

Characteristic data of the digital outputs

Table 44: Characteristic data of the digital outputs “External output 1” and “External output 2”

Type	Switching
Switching behavior	PNP switching to supply voltage V_S Default settings in the device: no function, logic: not inverted (active high)
Properties	• Short-circuit protected and temperature protected • Not electrically isolated from V_S
Electrical values	$0\ V \leq V_{out}$[1] $\leq V_S$ $(V_S - 1.5\ V) \leq V_{out} \leq V_S$ at I_{out}[2] $\leq 100\ mA$

1) Output voltage.
2) Output current.

NOTE
Allocate the functions for the digital outputs in the device using a configuration software, e.g., SOPAS ET.

13.4 Licenses

SICK uses open source software which is published by the rights holders under a free license. Among others, the following license types are used: GNU General Public License (GPL version 2, GPL version 3), GNU Lesser General Public License (LGPL), MIT license, zlib license and licenses derived from the BSD license.

This program is provided for general use without warranty of any kind. This warranty disclaimer also extends to the implicit assurance of marketability or suitability of the program for a particular purpose.

More details can be found in the GNU General Public License.

For license texts see **www.sick.com/licensetexts**.

Printed copies of the license texts are also available on request.

8016185/1MEV/2024-05-03/en

Australia
Phone +61 (3) 9457 0600
1800 33 48 02 – tollfree
E-Mail sales@sick.com.au

Austria
Phone +43 (0) 2236 62288-0
E-Mail office@sick.at

Belgium/Luxembourg
Phone +32 (0) 2 466 55 66
E-Mail info@sick.be

Brazil
Phone +55 11 3215-4900
E-Mail comercial@sick.com.br

Canada
Phone +1 905.771.1444
E-Mail cs.canada@sick.com

Czech Republic
Phone +420 234 719 500
E-Mail sick@sick.cz

Chile
Phone +56 (2) 2274 7430
E-Mail chile@sick.com

China
Phone +86 20 2882 3600
E-Mail info.china@sick.net.cn

Denmark
Phone +45 45 82 64 00
E-Mail sick@sick.dk

Finland
Phone +358-9-25 15 800
E-Mail sick@sick.fi

France
Phone +33 1 64 62 35 00
E-Mail info@sick.fr

Germany
Phone +49 (0) 2 11 53 010
E-Mail info@sick.de

Greece
Phone +30 210 6825100
E-Mail office@sick.com.gr

Hong Kong
Phone +852 2153 6300
E-Mail ghk@sick.com.hk

Hungary
Phone +36 1 371 2680
E-Mail ertekesites@sick.hu

India
Phone +91-22-6119 8900
E-Mail info@sick-india.com

Israel
Phone +972 97110 11
E-Mail info@sick-sensors.com

Italy
Phone +39 02 27 43 41
E-Mail info@sick.it

Japan
Phone +81 3 5309 2112
E-Mail support@sick.jp

Malaysia
Phone +603-8080 7425
E-Mail enquiry.my@sick.com

Mexico
Phone +52 (472) 748 9451
E-Mail mexico@sick.com

Netherlands
Phone +31 (0) 30 204 40 00
E-Mail info@sick.nl

New Zealand
Phone +64 9 415 0459
0800 222 278 – tollfree
E-Mail sales@sick.co.nz

Norway
Phone +47 67 81 50 00
E-Mail sick@sick.no

Poland
Phone +48 22 539 41 00
E-Mail info@sick.pl

Romania
Phone +40 356-17 11 20
E-Mail office@sick.ro

Singapore
Phone +65 6744 3732
E-Mail sales.gsg@sick.com

Slovakia
Phone +421 482 901 201
E-Mail mail@sick-sk.sk

Slovenia
Phone +386 591 78849
E-Mail office@sick.si

South Africa
Phone +27 10 060 0550
E-Mail info@sickautomation.co.za

South Korea
Phone +82 2 786 6321/4
E-Mail infokorea@sick.com

Spain
Phone +34 93 480 31 00
E-Mail info@sick.es

Sweden
Phone +46 10 110 10 00
E-Mail info@sick.se

Switzerland
Phone +41 41 619 29 39
E-Mail contact@sick.ch

Taiwan
Phone +886-2-2375-6288
E-Mail sales@sick.com.tw

Thailand
Phone +66 2 645 0009
E-Mail marcom.th@sick.com

Turkey
Phone +90 (216) 528 50 00
E-Mail info@sick.com.tr

United Arab Emirates
Phone +971 (0) 4 88 65 878
E-Mail contact@sick.ae

United Kingdom
Phone +44 (0)17278 31121
E-Mail info@sick.co.uk

USA
Phone +1 800.325.7425
E-Mail info@sick.com

Vietnam
Phone +65 6744 3732
E-Mail sales.gsg@sick.com

Detailed addresses and further locations at **www.sick.com**