OPERATING INSTRUCTIONS

AOS LiDAR

Object Detection Systems

SICK
Sensor Intelligence.

Product described	Product name: AOS LiDAR
Document identification	Title: AOS LiDAR Operating Instructions Part number: 8016800/18UD Status: 2020-09
Manufacturer	SICK AG Erwin-Sick-Str. 1 · 79183 Waldkirch · Germany
Trademarks	IBM is a trademark of the International Business Machine Corporation. MS-DOS is a trademark of the Microsoft Corporation. Windows is a trademark of the Microsoft Corporation. Other product names in this document may also be trademarks and are only used here for identification purposes.
Original documents	The German version 8016731/18UD of this document is an original SICK AG document. SICK AG does not assume liability for the correctness of a non-authorized translation. In case of doubt, contact SICK AG or your local agency.
Legal notes	Subject to change without notice

Contents

1 About these operating instructions

Please read through this chapter carefully before you use the documentation and work with the AOS LiDAR.

1.1 Described software versions

Software	Function	Status
SOPAS ET	SICK Engineering Tool for the configuration and diagnostics of the AOS LiDAR	≥ V 3.0
FSD Flexi Soft Designer	Configuration and diagnostic software for the control	≥ V 1.7

Tab. 1: Software versions

1.2 Purpose of this document

These operating instructions are designed to give **technical personnel** instructions on the safe mounting, configuration, electrical installation, commissioning, operation, and maintenance of the AOS LiDAR object detection systems.

These operating instructions do **not** provide information on operating the customer system into which the AOS LiDAR has been or is going to be integrated. Additional information on this can be found in the customer documentation.

1.3 Target group

These operating instructions are intended for persons integrating the AOS LiDAR into a machine, system or vehicle and performing initial commissioning and operation. They are also intended for the planners, developers and operating entities of machines and systems.

1.4 Information depth

Note These operating instructions contain information about the AOS LiDAR object detection system on the following topics:

- Product description
- Mounting
- Electrical installation
- Commissioning and configuration
- Maintenance and care
- Fault diagnosis and troubleshooting
- Technical data and dimensional drawings

When planning and using object detection systems such as the AOS LiDAR, technical skills are required that are not covered by this document.

The applicable official and legal regulations at the application site must always be complied with when operating the system.

Note Further information about the device components used in the AOS LiDAR can be found in the accompanying operating instructions.

1.5 Abbreviations used

AOS Advanced object detection system

LMS Measurement sensor = laser scanner from SICK AG

AWG American wire gage = standardization and classification of wires and cables according to type, diameter, etc.

SOPAS SICK Engineering Tool = software for configuring and diagnosing the LMS111 and LMS511 laser scanner

FSD Flexi Soft Designer = software for Flexi Soft safety controller configuration and diagnostics

EDM External device monitoring

ESD Electrostatic discharge

PLC Programmable logic control

1.6 Symbols used

Recommendation

Recommendations are designed to assist you in the decision-making process with respect to the use of a certain function or technical measure.

Note

Notes provide information about the features of a device, application tips, or other useful information.

1. / 2. ...
Step by step

Instructions that must be carried out in the described order are referred to as step-by-step instructions and are indicated by numbered lists. Carefully read and follow the instructions for action.

➢
Action

Instructions for taking action are indicated by an arrow. Carefully read and follow the instructions for action.

● ☀ ○

LED icons describe the status of a diagnostics LED.

- ● The LED is illuminated continuously.
- ☀ The LED is flashing.
- ○ The LED is off.

8, L 2

Display symbols show the status of the 7-segment display:

- U U Constant display of characters, e.g., U
- 8 Flashing display of characters, e.g., 8
- L 2 Alternating display of characters, e.g., L and 2

2 Safety

This chapter concerns your own safety and the safety of the system operator.

▶ Please read through this chapter carefully before using the AOS LiDAR or the machines/systems monitored by the AOS LiDAR.

2.1 Qualified personnel

The AOS LiDAR must only be mounted, commissioned, and maintained by adequately qualified personnel.

A qualified person

- has sufficient skills in the field of the respective equipment based on their technical training and experience **and**
- has been instructed by the manufacturer in system operation and all applicable safety guidelines **and**
- is familiar with all relevant country-specific occupational safety regulations, work safety regulations, guidelines, and generally accepted technical rules and standards (e. g., DIN standards, VDE regulations, country-specific rules) to such an extent that he/she is able to evaluate the safe condition of the power-driven machinery **and** he/she
- has access to and has read the operating instructions.

2.2 Applications of the system

The AOS LiDAR (**A**dvanced **O**bject Detection **S**ystem) is a non-contact, self-testing object detection system that is used to protect against collisions.

The AOS LiDAR is used in monitoring applications where a stand-alone laser scanner is not sufficient and high operational reliability of the system provides added value.

2.3 Intended use

AOS LiDAR may only be used as described in section **2.2 Applications of the system**. It may only be used by qualified personnel in the environment in which it was mounted and initially commissioned by qualified safety personnel in accordance with these operating instructions.

Note **The AOS LiDAR object detection system is not a safety device for human protection and it therefore does not comply with any safety standards. For safety applications, please contact SICK AG.**

The AOS does not offer protection from flying parts or against radiation.

The AOS satisfies the requirements of Class A (industrial application) of the generic standard for radiated emission.

Note In the event of any other usage or of modification to the system – including in the context of mounting and installation – any claims against SICK AG under the warranty will be rendered void.

2.4 General safety notes and protective measures

2.4.1 Safety notes and icons

The following safety and hazard notes concern your own safety, the safety of third parties, and the safety of the devices. You must therefore observe these symbols at all times.

HAZARD

Denotes an immediate hazard that may result in severe to fatal injuries.

The symbol shown on the left-hand side of the note refers to the type of hazard in question (the example here shows a risk of injury resulting from electrical current).

WARNING

Denotes a potentially dangerous situation that may result in severe to fatal injuries.

The symbol shown on the left-hand side of the note refers to the type of hazard in question (the example here shows a risk of damage to the eye by laser beams).

WARNING

Denotes a potentially dangerous situation that may result in minor personal injury or possible material damage.

NOTE

Denotes a potential risk of damage or functional impairment of the device or the devices connected to it.

This icon refers to supplementary technical documentation.

2.4.2 General safety notes

The AOS LiDAR has been designed in a way that allows for safe operation. Protective devices reduce potential risks to the maximum possible extent. However, a certain level of risk will always remain.

Awareness of potential hazardous points in the system will help you to work in a safer manner and thus prevent accidents.

To avoid risks, please also observe the special warnings in each of the individual chapters.

WARNING

Safety notes

Observe the following to ensure the intended use of the AOS LiDAR as intended.

- The notes in these operating instructions (e.g. regarding use, mounting, installation, or integration into the machine control) must be observed.
- All official and statutory regulations governing the operation of the system must be complied with.
- The national and international legal specifications apply to the installation and use of the system, to its commissioning, and to recurring technical inspections, in particular:
  - Work safety regulations and safety rules
  - Any other relevant safety provisions
- The manufacturer and user of the system are responsible for coordinating and complying with all applicable safety specifications and regulations in cooperation with the relevant authorities.
- The checks must be carried out by qualified safety personnel or specially qualified and authorized personnel and must be recorded and documented to ensure that the tests can be reconstructed and retraced at any time.
- These operating instructions must be made available to the operator of the system in which the AOS LiDAR is used. The system operator must be instructed by qualified safety personnel and must read the operating instructions.
- Maintenance and repair work must only be done by trained and authorized SICK AG service technicians or qualified safety personnel of the customer.

WARNING

The AOS LiDAR is not suitable for the protection of humans within the meaning of the applicable safety standards for machines. The system therefore does not comply with safety standards.

2.4.3 Potential hazardous points

Laser radiation

WARNING

Damage to the eye by laser beam

The LMS111 or LMS511 laser scanners used in the AOS LiDAR conform to laser class 1 (eye-safe) criteria according to IEC 60825-1 (latest version); see laser warning plate on the device for publication date. This ensures compliance with 21 CFR 1040.10 except for the tolerances according to Laser Notice No. 50 of July 26, 2001.

The laser beam operates at a wavelength of γ = 905 nm (invisible infrared light). The laser beam is not visible to the human eye.
The radiation emitted in normal operation is harmless to human skin and eyes.

WARNING Improper use (e.g., opening the housing and stopping the motor) can result in dangerous exposure to radiation.

- ▶ Never open the laser scanner housing. Opening the housing does not interrupt the operation of the laser beam.
- ▶ Pay attention to the laser safety regulations as per IEC 60 825 1 (latest version).

Important

- No maintenance is required to ensure compliance with laser class 1.
- The laser output aperture is the inspection window on the laser scanner.
- The laser warning is located on the right side of the laser scanner.

Electrical current

HAZARD

Risk of injury and damage caused by electrical current

Improper handling of live devices may lead to severe personal injury or death by electric shock.

- ▶ Electrical installation and maintenance work must always be carried out by personnel authorized to do so.
- ▶ The power supply must be disconnected when attaching and detaching electrical connections.
- ▶ Select and implement wire cross-sections and their correct fuse protection in accordance with the applicable standards.
- ▶ Do not touch any live parts.
- ▶ In the event of danger, immediately disconnect the object detection system from the power supply.
- ▶ Always use original fuses with the specified current rating.
- ▶ Report any damaged cables to the maintenance team without delay.
- ▶ Observe the up-to-date safety regulations when working on electrical systems.

HAZARD

Damaging potential equalization currents due to different ground potentials

The AOS LiDAR has been designed and tested for electrical safety in accordance with EN 60 950-1 (2006-04) and EN 60 950-1/A11 (2009-03).

The AOS LiDAR is connected to the peripheral devices (power supply, PLC/host, any other sensors, etc.) via shielded cables. The shield of each cable is connected to the metal housing of the corresponding system components via the system plug.

If the peripheral devices have metal housings and if the cable shields are also connected to these housings, it is assumed that all devices involved in the system have the same ground potential.

This is achieved, for example, by complying with the following conditions:

- Mounting the devices on conductive metal surfaces.
- Correctly grounding the devices and metal surfaces in the system.
- Low-impedance and current-carrying equipotential bonding between areas with different ground potentials, if necessary.

If these conditions are not met, e.g., on devices in a widely distributed system spanning several buildings, different ground potentials may cause potential equalization currents to flow along the cable shields between the devices, thereby creating hazards.

HAZARD

Risk of injury and damage caused by potential equalization currents

Potential equalization currents between the AOS LiDAR and the peripheral devices can have the following effects:

- Dangerous voltages on the metal housing, e.g., of the laser scanner.
- Incorrect functioning of or irreparable damage to the devices
- Damage/irreparable damage to the cable shields due to heating and cable fires

Commissioning/operation/maintenance

WARNING

Risk resulting from incorrect commissioning and configuration

Do not commission without testing by qualified personnel!

Before carrying out initial commissioning of the system, you must have it checked and approved by qualified safety personnel.

NOTE

Claims under the warranty rendered void

The housings of the devices must not be opened. The devices are sealed.

If the device is opened, any warranty claims against SICK AG will be void.

WARNING

Risk resulting from faults

Cease operation if the cause of the malfunction has not been clearly identified.

- Immediately stop system operation if you cannot clearly identify the fault and if you cannot safely remedy the problem.

2.5 Protecting the environment

The components of the object detection system have been designed to minimize their impact on the environment. They consume little power and natural resources.

Always act in an environmentally responsible manner at work. For this reason, please note the following information regarding **disposal**.

Disposal after final decommissioning

- Always dispose of unusable or irreparable devices in accordance with the applicable waste disposal regulations specific to your country.
- Remove the plastic parts and recycle the aluminum housing of the laser scanner.
- Dispose of all electronic assemblies as hazardous waste. The electronic assemblies are easy to dismantle.

Note SICK AG does not take back devices that are unusable or irreparable.

3 Product description

This chapter provides information on the special properties of the AOS LiDAR object detection system. It describes the construction and operating principle of the system, in particular the interaction of the different components.

Note Always read this chapter before you mount, install, and commission the system.

3.1 Scope of delivery

The AOS LiDAR object detection system is available in two configuration groups: AOS10x and AOS50x. Different expansion stages result corresponding to the number of LMS laser scanners and the expansion modules of the control.

NOTE

Thorough check for completeness

- ► It is recommended that you carefully check for and report transport damage of any kind as soon as possible after receiving the system.
- ► Also verify that the delivery includes all components listed on the delivery note.

3.1.1 Scope of delivery, AOS501-AOS504

The AOS501 configuration consists of a pre-configured LMS511 laser scanner, the Flexi Soft control (comprising the main module and an I/O expansion module) and a connection box for bridging large distances between the laser scanner and the terminal compartment.

Fig. 1: Main components of the AOS LiDAR AOS501

AOS501

Part No.	Quantity	Description
1064409	**1**	**AOS501**
Consisting of:		
1057618	1	Laser scanner LMS511-10100S02
1043783	1	Flexi Soft main module FX3-CPU000000
1043700	1	Flexi Soft system plug FX3-MPL000001
1044125	1	Flexi Soft I/O module FX3-XTIO84002
6034574	1	USB configuration connection DSL-8U04G02M025KM1
2073337	1	USB stick with configuration file (prepared configuration for control and laser scanner) as well as device and system documentation
6030928	1	Ethernet connection cable SSL-2J04-G10ME
1059092	1	LMS511 laser scanner accessory set 1, consisting of: ▪ Connection box for power, I/O and RS-232/-422 data ▪ Mounting kit for mounting the laser scanner and connection box

The "SOPAS" and Flexi Soft Designer configuration tools can be downloaded at *www.sick.com*.

AOS502

Scope of delivery includes the same items listed for the AOS501, except for the following differences:

Part No.	Quantity	Description
1066130	**1**	**AOS502**
Consisting of:		
1057618	2	Laser scanner LMS511-10100S02
1059092	2	Laser scanner LMS511 accessory set 1

AOS503

Scope of delivery includes the same items listed for the AOS501, except for the following differences:

Part No.	Quantity	Description
1066131	**1**	**AOS503**
Consisting of:		
1057618	3	Laser scanner LMS511-10100S02
1044125	2	Flexi Soft I/O module FX3-XTIO84002
1059092	3	Laser scanner LMS511 accessory set 1

AOS504

Scope of delivery includes the same items listed for the AOS501, except for the following differences:

Part No.	Quantity	Description
1066132	**1**	**AOS504**
Consisting of:		
1057618	4	Laser scanner LMS511-10100S02
1044125	2	Flexi Soft I/O module FX3-XTIO84002
1059092	4	Laser scanner LMS511 accessory set 1

Optional

Part No.	Quantity	Description
2063050	1	Weather hood 180° LMS511
2026151	1	Weather hood 125° LMS5xx
2099539	1	Weather hood 190° overhead mounting

Note

All AOS50x systems are also available on request as heavy duty version, consisting of:

- LMS511 12100S04 article no.: 1100267
  and the corresponding accessories

3.1.2 Scope of delivery, AOS101-AOS104

The AOS101 configuration consists of a pre-configured LMS111 laser scanner and the Flexi Soft control, which consists of the main module and an I/O expansion module. The laser scanner is connected to the Flexi Soft control via pre-wired configuration cables.

Fig. 2: Main components of the AOS LiDAR AOS101

AOS101

Part No.	Quantity	Description
1064408	**1**	**AOS101**
Consisting of:		
1047516	1	Laser scanner LMS111-10100S01
1043783	1	Flexi Soft main module FX3-CPU000000
1043700	1	Flexi Soft system plug FX3-MPL000001
1044125	1	Flexi Soft I/O module FX3-XTIO84002
6034574	1	USB configuration connection DSL-8U04G02M025KM1
2073337	1	USB stick with configuration files and “AOS LiDAR” operating instructions
2062346	1	Connection box for power, I/O and RS-232/RS-422 data (not Ethernet), with three pre-wired M12 cables, 8-pin
2046025	1	Mounting kit for laser scanner
6030928	1	Ethernet connection cable SSL-2J04-G10ME

The “SOPAS” and Flexi Soft Designer configuration tools can be downloaded at *www.sick.com*.

Optional

Part No.	Quantity	Description
2046458	1	LMS111 weather hood 270°

AOS102

Scope of delivery includes the same items listed for the AOS101, except for the following differences:

Part No.	Quantity	Description
1066127	**1**	**AOS102**
Consisting of:		
1047516	2	Laser scanner LMS111-10100S01
2062346	2	Connection box
2046025	2	Mounting kit for laser scanner

AOS103 Scope of delivery includes the same items listed for the AOS101, except for the following differences:

Part No.	Quantity	Description
1066128	**1**	**AOS103**
Consisting of:		
1047516	3	Laser scanner LMS111-10100S01
1044125	2	Flexi Soft I/O module FX3-XTIO84002
2062346	3	Connection box
2046025	3	Mounting kit for laser scanner

AOS104 Scope of delivery includes the same items listed for the AOS101, except for the following differences:

Part No.	Quantity	Description
1066129	**1**	**AOS104**
Consisting of:		
1047516	4	Laser scanner LMS111-10100S01
1044125	2	Flexi Soft I/O module FX3-XTIO84002
2062346	4	Connection box
2046025	4	Mounting kit for laser scanner

3.2 Components in the system

3.2.1 The LMS511/LMS111 laser scanners

The LMS511 or LMS111 laser scanners, whose use depends on the application requirements, are laser measurement sensors that scan their environment in two dimensions using a time-of-flight method. When a sent laser beam is reflected by a target object, the position of the object is determined as a distance and an angle and output to the data interface and supplied to the internal field evaluation.

The laser output occurs at the front screen. It is indicated by a corresponding mark.

Fig. 3: Laser output aperture on the LMS511 / LMS111 laser scanner

Different monitoring fields are defined within the scanning range of the laser scanners (scanning range). Each monitoring field is linked to at least one evaluation case; the assigned switching output is triggered if the respective field is infringed (object detection in the monitoring field).

The LMS511 laser scanner has a monitoring radius of 80 m / 38 m for black objects with 10% remission and a scanning angle of 190°. The monitoring radius of the LMS111 laser scanner is 20 m / 18 m for black objects with 10% remission. The scanning angle is 270°.

All input and output signals from the laser scanner are directly connected to the central Flexi Soft control, which evaluates the laser scanner information accordingly (see below).

The laser measurement sensors are designed for outdoor use in harsh ambient conditions. In order to withstand such conditions, the devices have various filter technologies and an internal heater. They are also equipped with weather hoods.

Both laser scanners feature automatic contamination measuring for the front screen. The contamination signals can be merged using the central Flexi Soft control and can be output via a shared application diagnostic output.

Note The laser scanner can evaluate multiple reflection pulses. Additional reflective pulses occur when the laser beam hits smaller particles such as snowflakes or raindrops. In very harsh environments, the laser scanner can also be switched to evaluate the last echo if necessary.

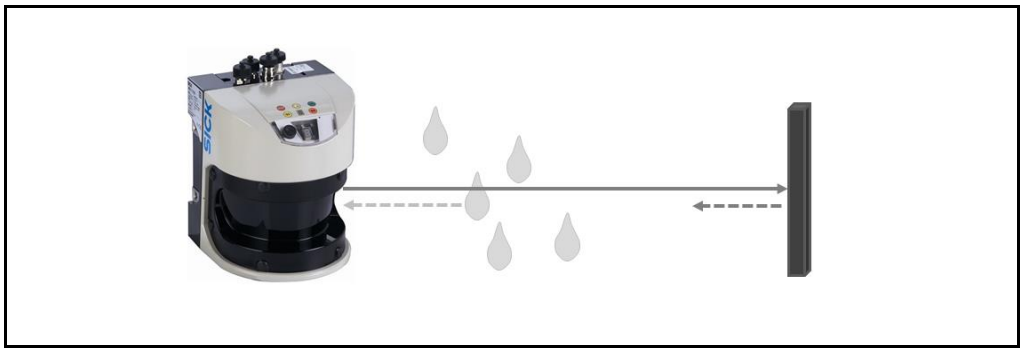

Fig. 4: Evaluation of reflection pulses by the laser scanner

For detailed information about the operating principle of the LMS laser scanner, please refer to the operating instructions of the respective devices.

3.2.2 The Flexi Soft control

The Flexi Soft control consists of the **CPU0** central main module (1) and at least one **XTIO** I/O expansion module (2).

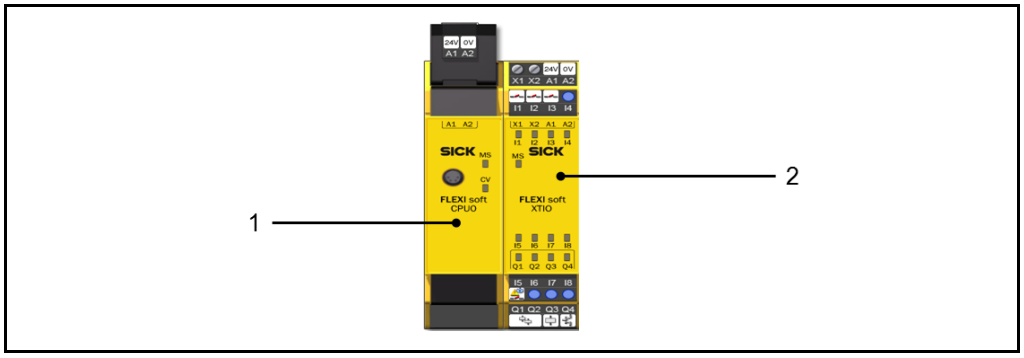

Fig. 5: Flexi Soft safety control components

- The **CPU0 main module** is the central logic unit of the control. Here, all signals are analyzed and evaluated within the configured logic. The result of this processing is transmitted to the higher-level machine or system control via the I/O module.

  The configuration can be edited and adapted to the requirements of the individual application. For this purpose, the main module has an M8 configuration connection.

- The **XTIO I/O expansion module** provides the I/O input and output signals from the AOS LiDAR. The communication with the connected laser scanners and with the downstream machine control occurs via the switching signals of the AOS LiDAR.

  One XTIO I/O expansion module is necessary for every two laser scanners. One laser scanner uses three switching inputs in the basic version. Signals are communicated to the upper-level system control via switching outputs.

  It is possible to attach additional XTIO modules according to the expansion desired.

  In total, the control can be used to operate up to 12 modules (144 I/O signals).

Note Different configurations are supplied for the Flexi Soft control. The appropriate control configuration for the system can be carried out by downloading a file. This file already

contains all AOS functions necessary for checking both the object detection system and the internal self-test of the sensors.

3.2.3 The test target

The self-diagnosis of the object detection system occurs via the continuous detection of an external test target. During this process, the corresponding scanner monitoring field is infringed by the test target. Only by using external test targets can the full functional range of the AOS LiDAR object detection system be ensured.

At least one external test target is required for each laser scanner. It is also possible to use a shared test target for multiple laser scanners.

A stationary body located outside the actual object detection monitoring area can be used as a test target.

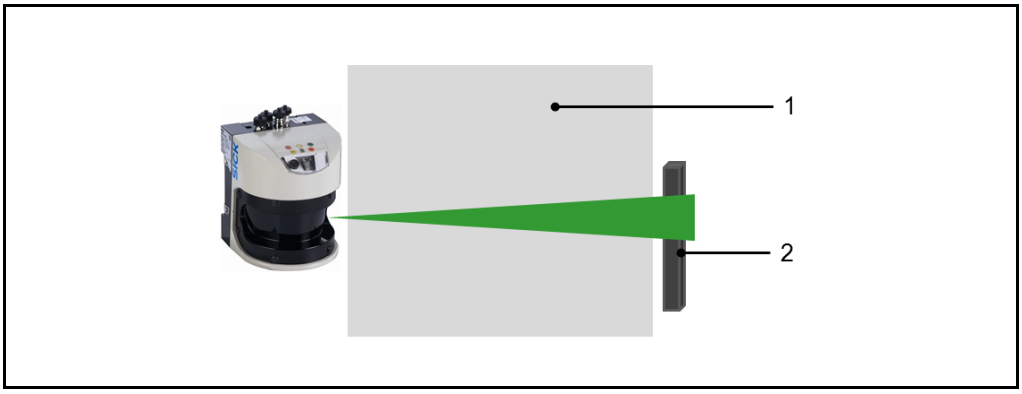

Fig. 6: Detection of a test target

No.	Meaning
1	Monitoring field
2	Test target

Tab. 2: Status indicators on the Flexi Soft main module

The surface of the test target should be flat. For example, sheets, panels or even a suitable part of the monitored machine are appropriate test targets. In order to avoid reflections on the surface of the external test target, the area of the test target must not be covered with a glossy coating. The color of the test target should be consistent with the color of the objects that are to be detected.

The width of the test target must be at least 30 mm. The following applies to the minimum width of the test target as a rule of thumb at distances > 1.5 m to the test target:

Width of test target [mm] = target scanning range [mm] / 50.

To determine the exact diameter of the light spot, please consult the operating instructions for the corresponding laser scanner.

Note Alternatively, it is possible to use a stationary machine or system part as a test target.

3.2.4 The connection box of the laser scanner

Using the connection box, connecting the laser scanner and the control cabinet to the Flexi Soft control is easy. The connection box is delivered with the AOS LiDAR systems by default.

Separate installation cables are routed from the Flexi Soft to the connection box on-site to produce the connection. The connection box is connected to the laser scanner via the pre-configured cables (see chapter *5.1 Connecting the LMS511 laser scanner*).

When using the AOS LiDAR in the AOS10x configuration, the LMS111 laser scanners are also connected to the Flexi Soft using the configured connection box or using system cables (max. 20 m) (see chapter *5.2 Connecting the LMS111 laser scanner*).

3.3 Principle of operation

The AOS LiDAR is a self-testing object detection system whose functionality as a whole is monitored by the Flexi Soft safety control.

Monitoring fields and evaluation cases

The monitored area scanned by the laser scanners is divided into different fields. The size and geometry of the monitoring fields can vary and must be configured on-site.

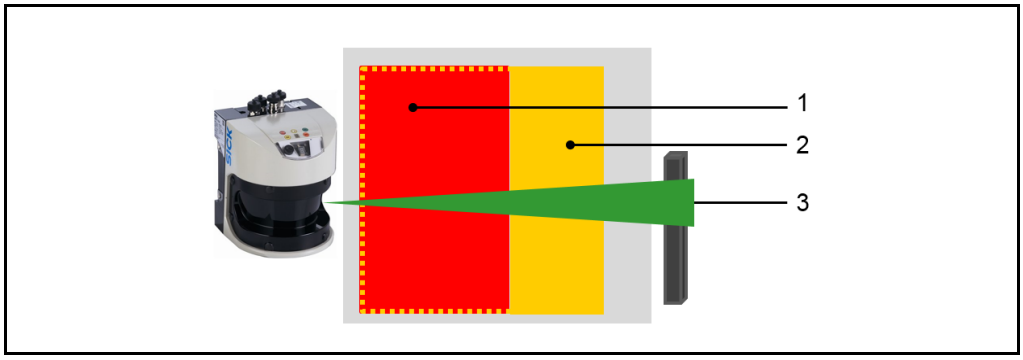

Fig. 7: Predefined monitoring fields in the AOS LiDAR

In the AOS LiDAR, the following standard monitoring fields are available:

- **Stopping field** (1) e.g., for stopping the system or a movement direction on a mobile system.
- **Warning field** (2) e.g., for advance warning or reduction of speed on a mobile system.
- **Test field** (3) for detecting an external test target.

Switching signals in object detection

The laser scanners operate internally with so-called **evaluation cases** that are assigned to the monitoring fields. If a monitoring field is infringed, this will be signaled by the corresponding switching output on the laser scanner.

The Flexi Soft analyzes the information from the laser scanner and transmits the corresponding results, such as “Warning field infringed” or “Stopping field infringed”, to the upper-level system control.

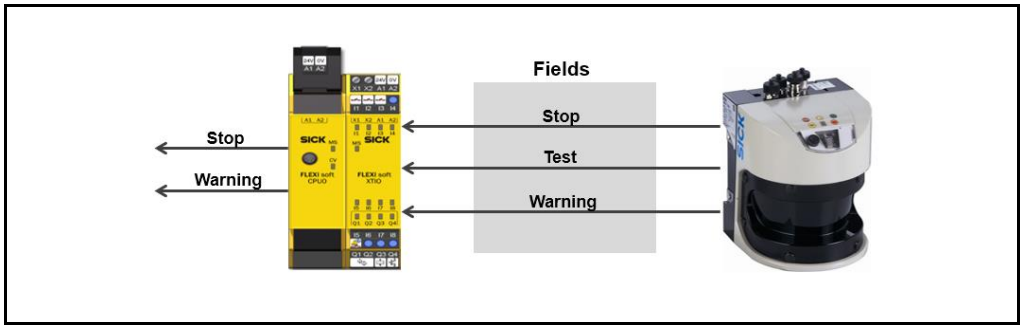

Fig. 8: Switching signals for object detection

Note Additional control tasks, such as an emergency stop or the evaluation of, for example, limit switches, are also possible with the Flexi Soft. However, they are not the primary feature of the AOS LiDAR object detection system!

Switching signals in self-diagnostics

The Flexi Soft control also handles the internal self-testing of the laser scanners. For this purpose, the control cyclically sends a changeover signal to the laser scanner to switch the assignment of the monitoring and test fields to the switching output (= switching evaluation fields).

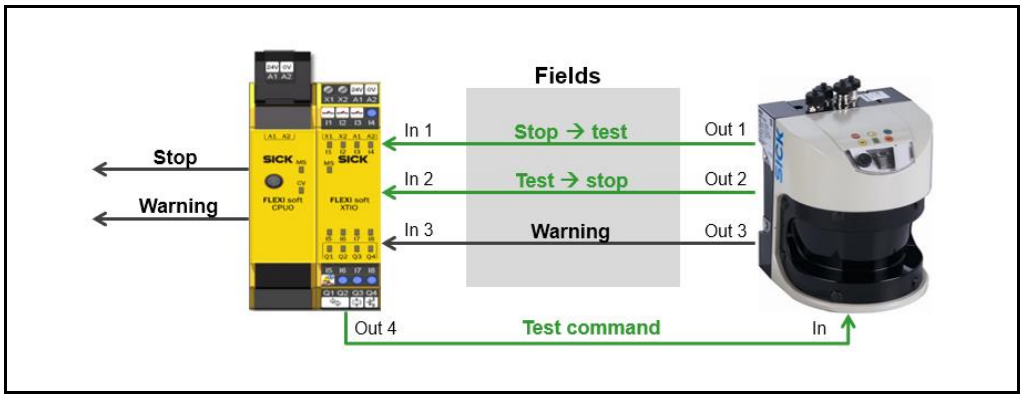

Fig. 9: Switching signals for the internal self-testing of the AOS LiDAR

The change in the assignment of stopping and warning fields causes the switching outputs to respond with a signal change from High to Low or, conversely, from Low to High. The control performs the safety-related plausibility check of the individual changes expected in the laser scanner switching signals.

In the example below, output **Out 1** reports an intact stopping field prior to the changeover signal (test command) by sending a **High** signal, and output **Out 2** reports the detected test target by sending a **Low** signal.

After the changeover signal, output **Out 1** reports the detected test target (**Low** signal) and output **Out 2** reports the intact stopping field (**High** signal).

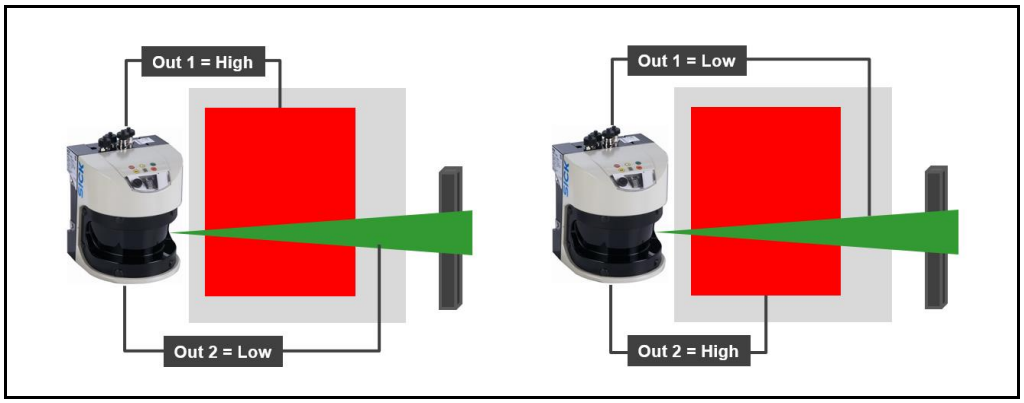

Fig. 10: Switching signals of the self-test

The test response from the laser scanner (on/off switching operation at the outputs) occurs once the response time set on the laser scanner has expired, e.g., after 180 msec.

Note The Flexi Soft wait time for the test response from the laser scanner must always be longer than the actual response time of the laser scanner (e.g. wait time = 1 sec., laser scanner response time = 500 msec.).

In exceptional cases, the predefined waittime must be adjusted via the Flexi Soft parameters.

What errors can be detected?

The internal self-test ensures that the test target is continuously detected by the laser scanner. If a correct response is not given, the control is locked and sends a stop signal to the upper-level machine control.

Incorrect responses can, for example, have the following causes:

- Defective laser scanner
- Missing test target
- Improper laser scanner adjustment (mechanical error or manipulation)
- Physically defective switching output on the laser scanner or short-circuit to VDC, cross-talk or short to ground
- Cable break

3.4 Status indicators

Status indicators are located on the laser scanners and the Flexi Soft control.

3.4.1 LEDs on the LMS111 / LMS511 laser scanner

In normal operation, the laser scanner is fully automatic—no operator intervention is required. The LEDs and 7-segment display signal the operational status of the LMS111 and LMS511 laser scanner.

Fig. 11: Laser scanner status indicators (pictured: the LMS511 laser scanner)

Display	Meaning
OK	Laser scanner in operation, no evaluation cases are reporting an event
STOP	Laser scanner in operation, at least one evaluation case reports an event
	Optics cover is dirty
Q1	Switching output switched
Q2	Laser scanner is in teach-in mode

Tab. 3: Status indicators on the laser scanner

The 7-segment display is used for diagnostics when errors or faults occur (see chapter 8.3 *Fault indicator on the LMS511 / LMS111 laser scanners*).

3.4.2 LEDs on the Flexi Soft

Main module CPU0

Fig. 12: Status indicators on the Flexi Soft main module

LED	Display	Meaning
MS	● Green	Module status, illuminated green during proper control operation.
MS	◐ Green (1 Hz)	System in stopped status. Start application in Flexi Soft Designer.
CV	○	Configuration in process.
CV	◐ Yellow (2 Hz)	The configuration is being permanently saved. Do not disconnect from power supply until save process has been completed.
CV	◐ Yellow (1 Hz)	Unverified configuration. The configuration must be verified by the Flexi Soft Designer.
CV	● Yellow	Verified configuration, illuminated yellow once configuration has been verified.

Tab. 4: Status indicators on the Flexi Soft main module

I/O module

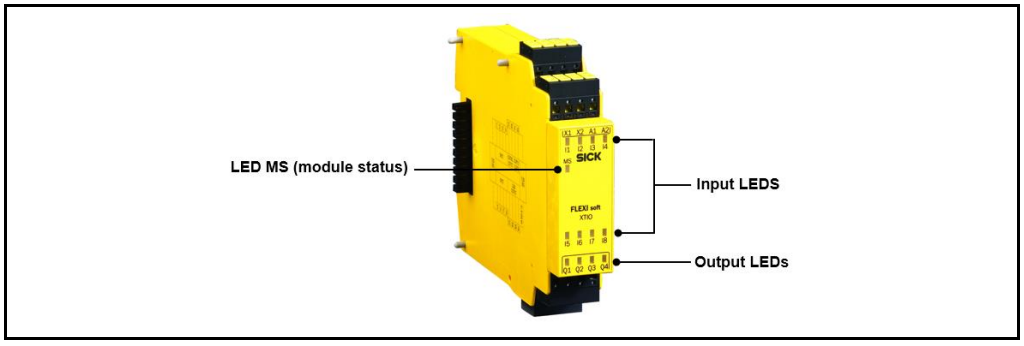

Fig. 13: Status indicators on the Flexi Soft expansion module

LED	Display	Meaning
MS	● Green	Module status, illuminated green during proper operation of expansion module.
MS	◐ Green	System in stopped status. Start application in Flexi Soft Designer.
I/O	○	Input/output is deactivated.
CV	● Green	Input/output is deactivated.

Tab. 5: Status indicators on the Flexi Soft expansion module

3.5 Parameter memory

3.5.1 Parameter set on connector plug of the Flexi Soft control unit

The system configuration parameters are saved on the connector plug of the Flexi Soft CPU0 main module. This allows the main or expansion modules to be replaced without having to reconfigure the Flexi Soft control (see chapter *7.3.2 Replacing Flexi Soft safety control modules*).

3.5.2 Parameter set in the laser scanner

All monitoring field with the basic field geometries as well as the necessary evaluation cases are already pre-configured and permanently saved (factory settings) in this laser scanner. Changes to the configuration (e.g. field geometries) are done using SOPAS configuration software. The configuration can be saved in a file and transferred to the replacement device when a laser scanner is replaced (see chapter *7.3.1 Replacing a laser scanner*).

4 Mounting

4.1 Planning mounting locations

The reliable and problem-free operation of the AOS LiDAR depends primarily on the proper planning and mounting of the laser scanners.

Laser scanner

- The laser scanners must have sufficient mechanical protection. Only with optimal positioning is it possible to adequately protect the system against collisions.
- Always be sure that the laser scanner has an unobstructed view of the areas that are to be monitored.
- The laser scanners must be mounted in such a manner that they can detect objects that penetrate the monitored area.

Test target

The test target must be mounted in such a way that the laser beam impinges on the surface of the test target as vertically as possible.

Notes on the scanning field

When planning to mount the laser scanners, be sure to consider the fact that the laser beam widens as the distance from the laser to mount the laser scanner increases.
As a result, the ground or a wall panel within the scanned area could end up being permanently detected under unfavorable conditions because it is being hit by the laser beam.

Recommendation

Detailed information on the operating principle of the laser measurement sensors can be found in the operating instructions for the LMS511 and LMS111 laser scanners.

4.2 Mounting the laser scanners

4.2.1 General notes

Mount the laser scanners at the designated locations. Be sure to observe the detailed drawings and information in the operating instructions for the LMS511 or LMS111 laser scanner.

WARNING

Be sure to closely observe the following notes during mounting:

- ▶ Mount the laser scanner so that it is protected from dirt and damage.
- ▶ Ensure that the field of view of the entire front screen is not restricted.
- ▶ Always mount the laser scanner such that you are able to insert and remove the connector plug.
- ▶ Avoid excessive shock and vibration exposure of the laser scanner.
- ▶ For systems that vibrate heavily, use shock absorbers to prevent the possibility of fixing screws coming loose unintentionally.

Weather hood Because of the ambient conditions, a weather hood is always recommended.

The weather hood also protects the laser scanner from direct sunlight on the scanner housing (overheating) and, to a great extent, from dazzling resulting from sunlight or other light sources.

4.2.2 Mounting the LMS511 laser scanner

The LMS511 laser scanner is ideally mounted so that the connector plug faces **down** so that the contamination diagnostics are not affected – regardless of whether or not a weather hood is being used.

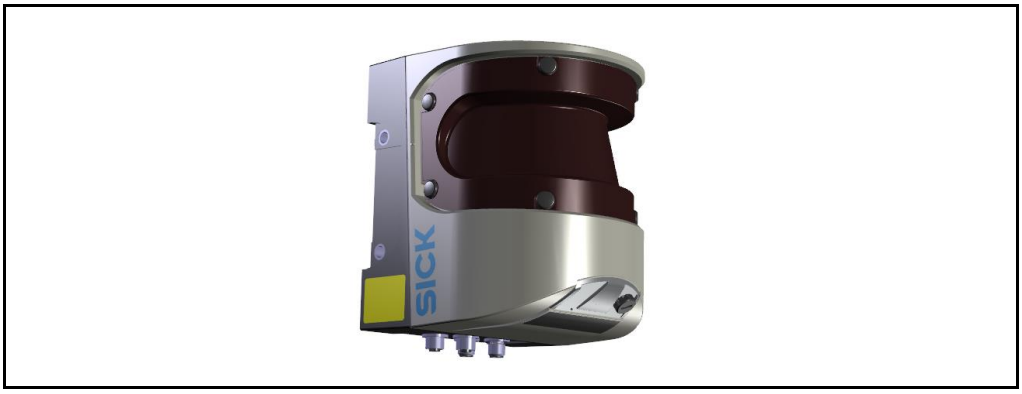

Fig. 14: Mounting the 511 laser scanner

Mounting the LMS511 laser scanner

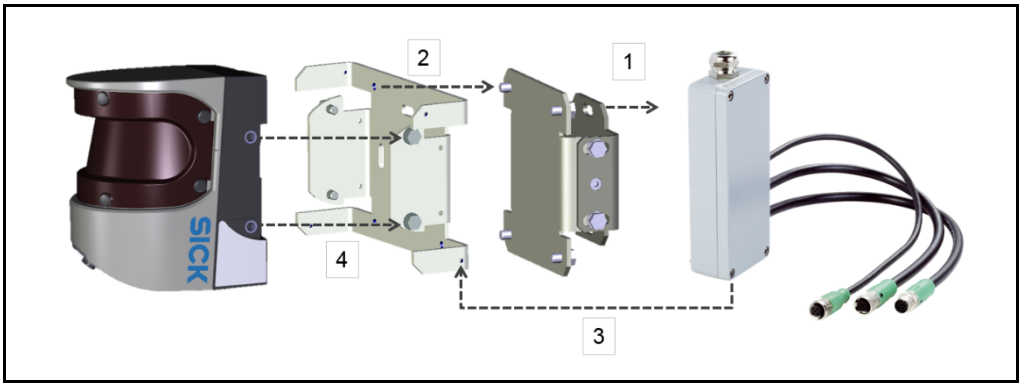

Fig. 15 Mounting kit for the LMS511 laser scanner

1. Mount the wall-mounting kit on the desired mounting surface.
2. Mount the mounting bracket with the adapter plate on the wall-mounting kit.
3. Mount the connector box on the adapter plate of the mounting bracket.
4. Mount the LMS511 laser scanner on the mounting bracket.
5. Adjust the LMS511 laser scanner longitudinally and crosswise.

Mounting the connection box

► Mount the local connection box next to or above the LMS511

4.2.3 Mounting the LMS 111 laser scanner

The preferred mounting position of the LMS111 laser scanner is with the connector plugs facing **up**. The weather hood should be mounted on the device accordingly (see the operating instructions for the LMS511 laser scanner).

Fig. 16: Mounting the 111 laser scanner

Mounting the LMS111 laser scanner

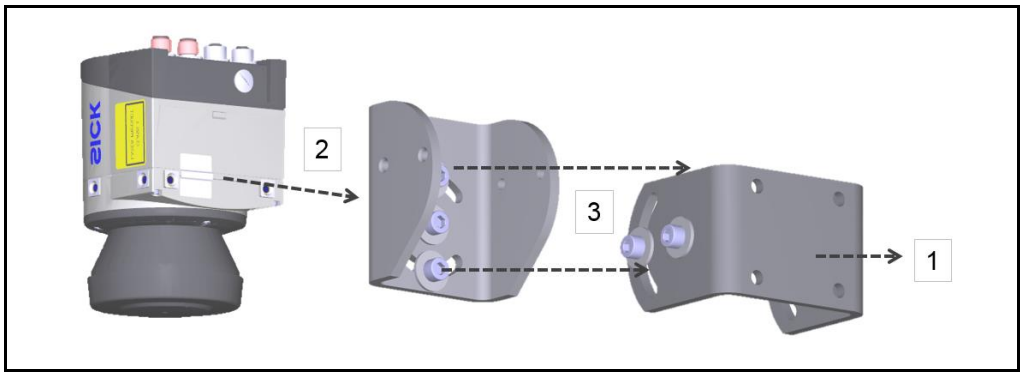

Fig. 17 Mounting kit for the LMS111 laser scanner

1. Mount the lower part of the mounting bracket on the mounting surface.
2. Mount the LMS111 laser scanner on the upper part of the mounting bracket.
3. Mount the LMS111 laser scanner on the lower part of the bracket with the upper part.

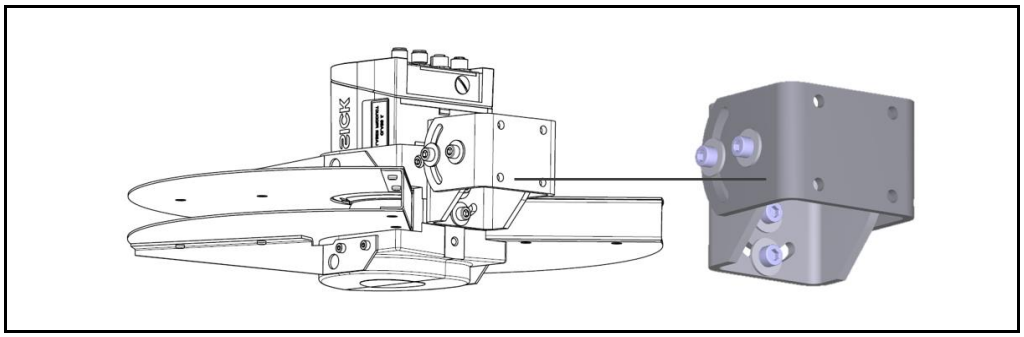

Fig. 18: LMS111 laser scanner with mounting kit and weather hood

Mounting the connection box

► Mount the local connection box next to or above the LMS111

4.3 Mounting the Flexi Soft control

WARNING

Consider the protection class

The Flexi Soft control has an IP 20 protection class and must always be mounted in an electric or control cabinet.

The Flexi Soft control should be mounted in a suitable location in the control cabinet.

Ideally, it should be mounted near the higher-level control but never in the vicinity of transformers, contactors or other power units.

In order to accommodate the leads and wiring, there must be enough terminals available.

Mounting

Mount the Flexi Soft control modules in a suitable location on the mounting rail in the control cabinet.

1. Hang the module on the mounting rail.

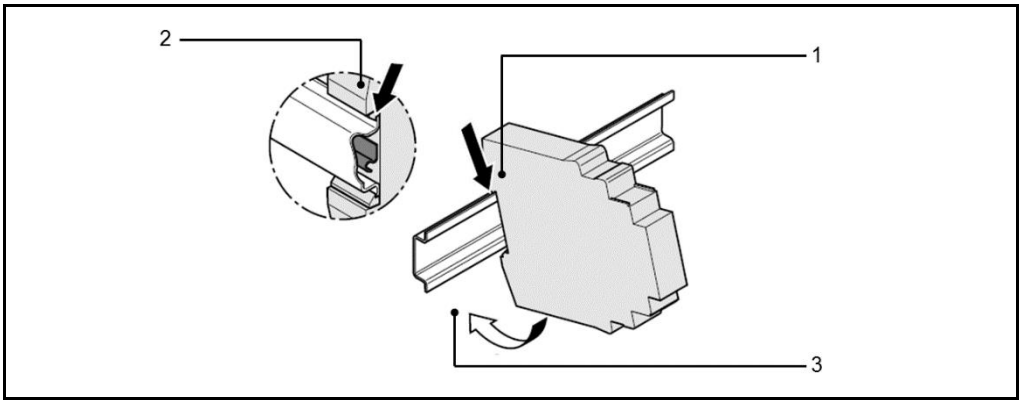

Fig. 19: Mounting the Flexi Soft modules

2. Ensure the correct fit of the grounding spring. The grounding spring of the module must be flush against the mounting rail such that it is secure and can suitably conduct electricity.
3. Snap the module into place on the mounting rail by applying slight pressure in the direction of the arrow.

Note If multiple modules are present, slide each of the modules together in the direction of the arrow until the side-mounted plug connector engages.

Install end pieces on the left and right sides.

4.4 Mounting and positioning the test targets

Because the LMS511 and LMS111 laser scanners have different detection sensitivities, the related test targets must be positioned differently. The test target must always be located within the scanning range of the respective laser scanner, but it must be located outside of the monitoring field.

Check whether there is a system part that would be suitable for use as a test target. If none can be found, mount a suitable test target. The distances indicated below serve as standard values.

Laser scanner LMS511

If using an LMS511 laser scanner (1), do not mount the test target (2) too close to the LMS511. The standard value for the minimum distance from the laser scanner is 0.5 m.

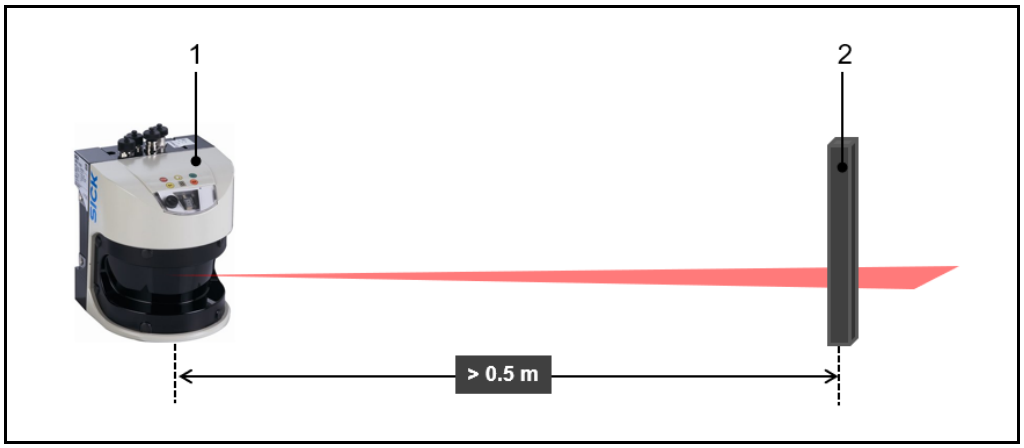

Fig. 20: Mounting the test target for the LMS511 laser scanner

Laser scanner LMS111

If using an LMS111 laser scanner (1), mount the test target (2) at **close range**. The standard value is a distance of 500 mm from the device.

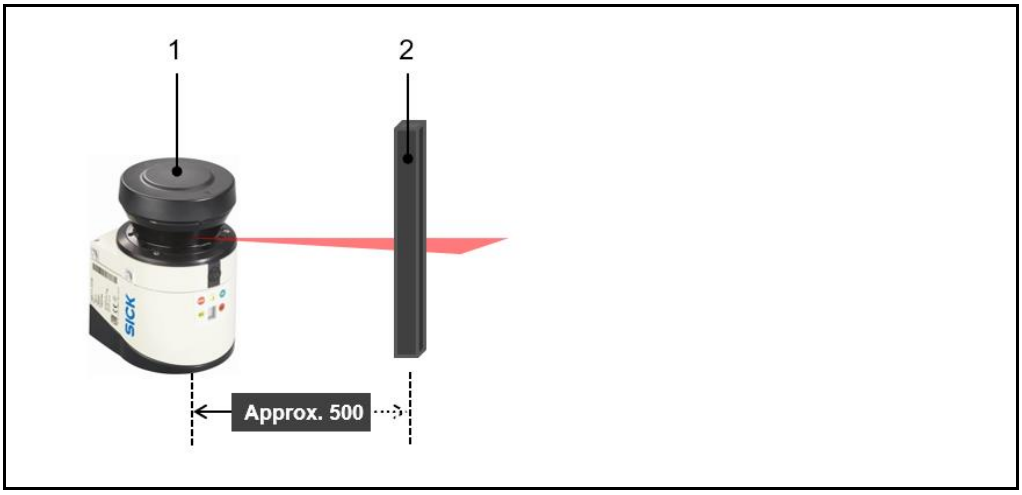

Fig. 21: Mounting the test target for the LMS111 laser scanner

Because the LMS111 laser scanner has a scanning angle of 270 °, test targets can also be positioned to the rear or the side.

Note The laser beam should hit the test target perpendicularly.

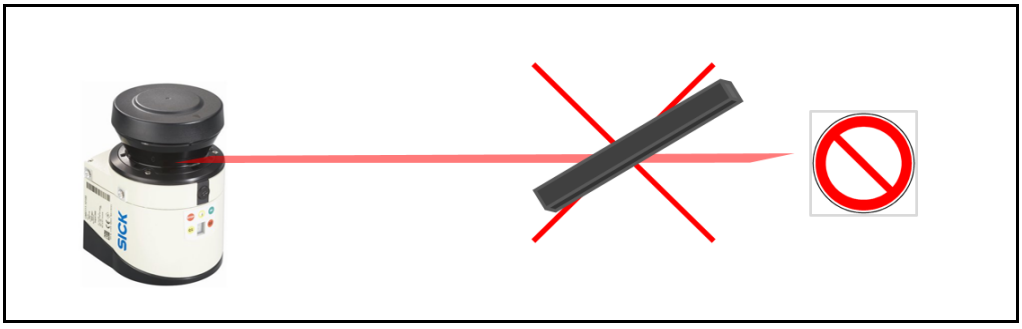

5 Electrical installation

HAZARD

Disconnect the power to the system

- Make sure that all AOS LiDAR components are disconnected from the power supply during electrical installation.

HAZARD

Risk of injury due to electrical current

- Standard safety requirements must be met when working on electrical systems.
- The power supply must be disconnected when attaching and detaching electrical connections.

5.1 Connecting Flexi Soft to the power supply

The connections on the Flexi Soft control can be used with cables of solid wire or stranded wire. The following table shows the proper wire cross-sections for connection to the terminals.

Wire cross-section	mm²	AWG
Solid wire	0.2 to 2.5 mm²	AWG 24 to 12
Stranded wire (flexible)	0.34 to 1.5 mm²	AWG 22 to 16

Tab. 6: Wire cross-sections for the Flexi Soft control connections

Note The Flexi Soft and the laser scanners must be connected to the same power supply.

If using multiple power supplies, a 0 V equalization between the individual power supplies must be established.

- Attach the Flexi Soft main module and the I/O expansion modules to the power supply.

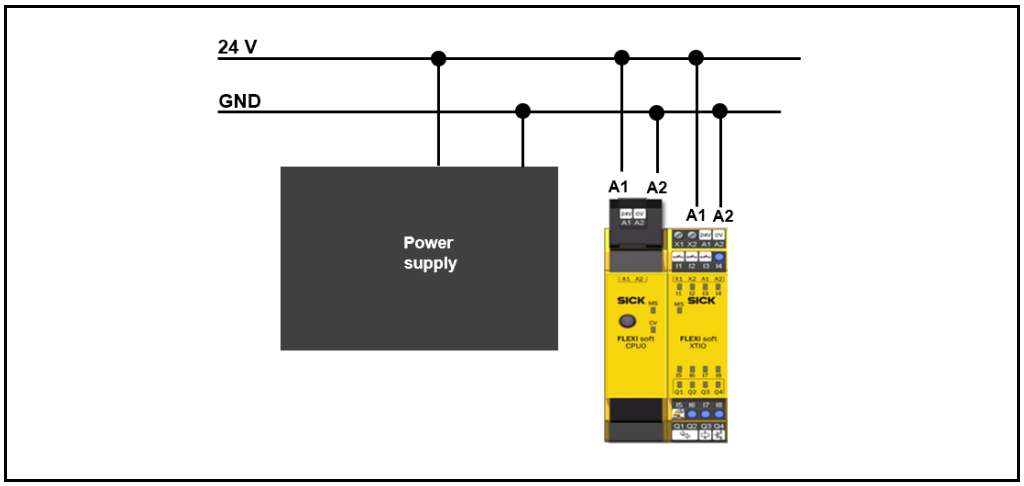

Fig. 22: Connecting the Flexi Soft main module and I/O module to the power supply

- Wire the modules to the power supply as follows:

Main module / Expansion module	Power supply
A1	+24 V
A2	0 V

Tab. 7: Connecting the Flexi Soft main module and I/O module to the power supply

5.2 Connecting the LMS511 laser scanner

The connection of the LMS511 laser scanner to the Flexi Soft control takes place via the connection box.

Prerequisites

It is assumed that a separate installation cable has been routed from the control cabinet to the connection box or to the LMS511 laser scanner.

- It is necessary to use a shielded cable.
- The cable must have at least 6 wires (recommendation: 9 wires).
- You should also include spare wires (e.g., if you wish to energize the heater on the laser scanner separately or lead optional signals).

Note Take into account the voltage drop with long cables, especially when operating the heater.

Cabling principle

The cabling concept is always the same, regardless of whether you are connecting one laser scanner or multiple laser scanners to the control. The number of connected laser scanners is signaled to the Flexi Soft control by the control file provided. The respective file is transferred to the control using Flexi Soft Designer (download).

Recommendation Be sure to also observe the **electrical diagrams** contained in the annex to these operating instructions!

5.2.1 Connecting the connection box to the LMS511 laser scanner

The connection box and the LMS511 laser scanner are connected via the pre-mounted cables on the connection box.

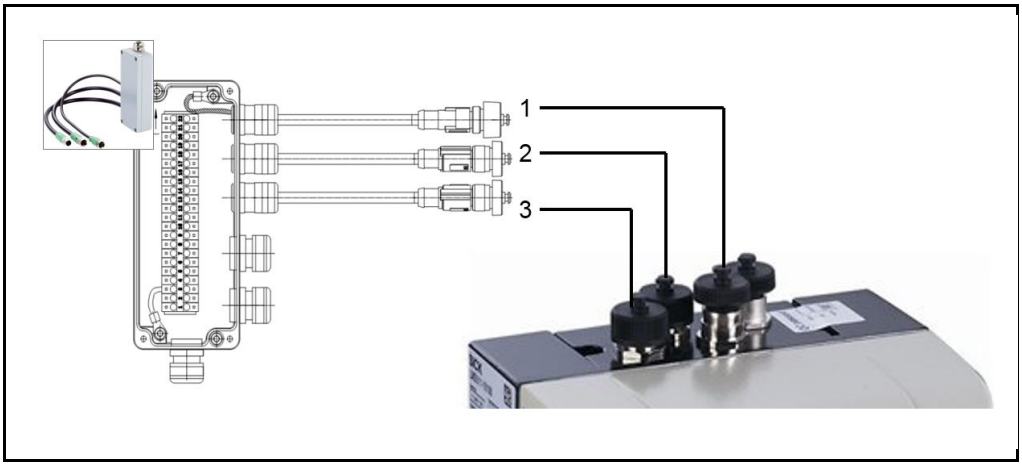

Fig. 23: Connection of the LMS511 laser scanner and the connection box

► Using the M12 round connectors, screw the pre-mounted cables onto the connections on the LMS511 laser scanner as indicated below.

Cable no. (in picture)	Laser scanner connection
1	I/O cable
2	Data/Input cable
3	Power supply

Tab. 8: Connection of LMS511 laser scanner and connection box

5.2.2 Connecting the installation cable in the connection box

The wires of the routed installation cable must be connected in the terminal block of the connection box on the LMS511 laser scanner.

Note To provide a clearer overview, the wires in the figures below are numbered.

▶ Connect the wires in the terminal block of the connection box as follows:

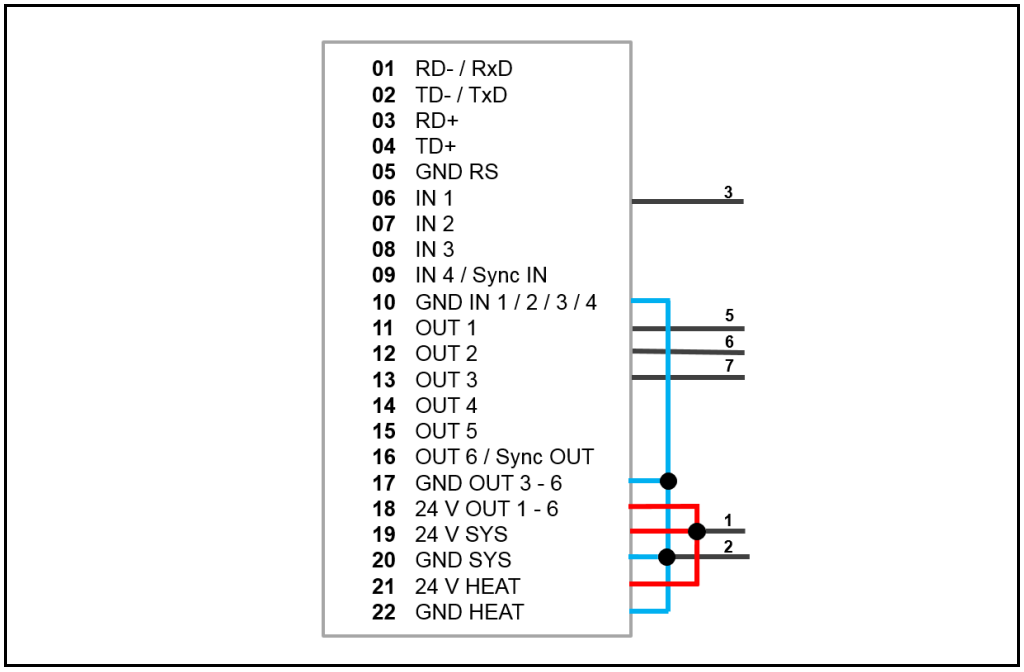

Fig. 24: Connecting wires in the connection box (min. wiring)

Pin	Wire no.	Connection
19	1	Voltage 24 V
20	2	Ground
06	3	Input 1 (test signal from Flexi Soft)
	4	Not assigned (spare)
11	5	Output 1 (stop/test field status)
12	6	Output 2 (test/stop field status)
13	7	Output 3 (warning)

Tab. 9: Connecting wires in the connection box (min. wiring)

Notes

- The wire jumpers indicated for voltage and ground are not contained in the connection box at delivery. You must lay the bridges on the connection side.
- When using a common power supply unit for the sensor and heater, the power supply unit must fulfill the requirements of the sensor part.
- If two separate power supply units are used for the sensor and the heater, terminals 19-21 and 20-22 are not jumpered. The 0-V outputs of both power supply units must be connected for potential equalization.

5.2.3 Wiring the installation cable wires to the Flexi Soft control

The individual wires of the installation cable are connected in the control cabinet and wired to the Flexi Soft control module.

Wiring the power supply in the control cabinet

▶ Connect the wires for the power supply to the terminals in the control cabinet.

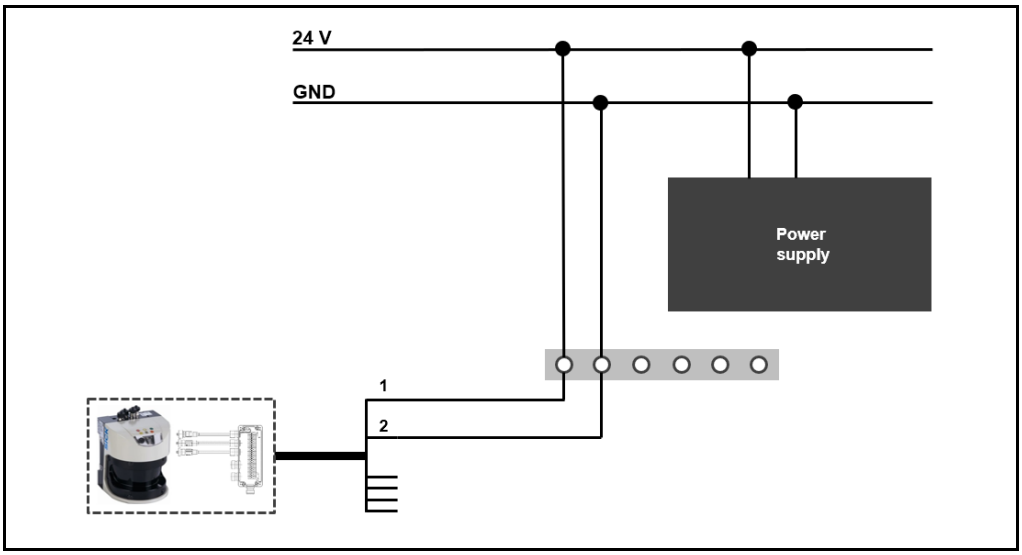

Fig. 25: Connecting the power supply to terminals in the control cabinet (LMS511 laser scanner)

▶ Connect the wires to the power supply in the control cabinet as follows:

No.	Connection	Voltage supply
1	Voltage	+24 V
2	Ground	0 V

Tab. 10: Connecting the power supply to terminals in the control cabinet (LMS511 laser scanner)

Wiring inputs and outputs in the control cabinet

▶ Connect the wires for the input and output switching signals in the control cabinet as follows:

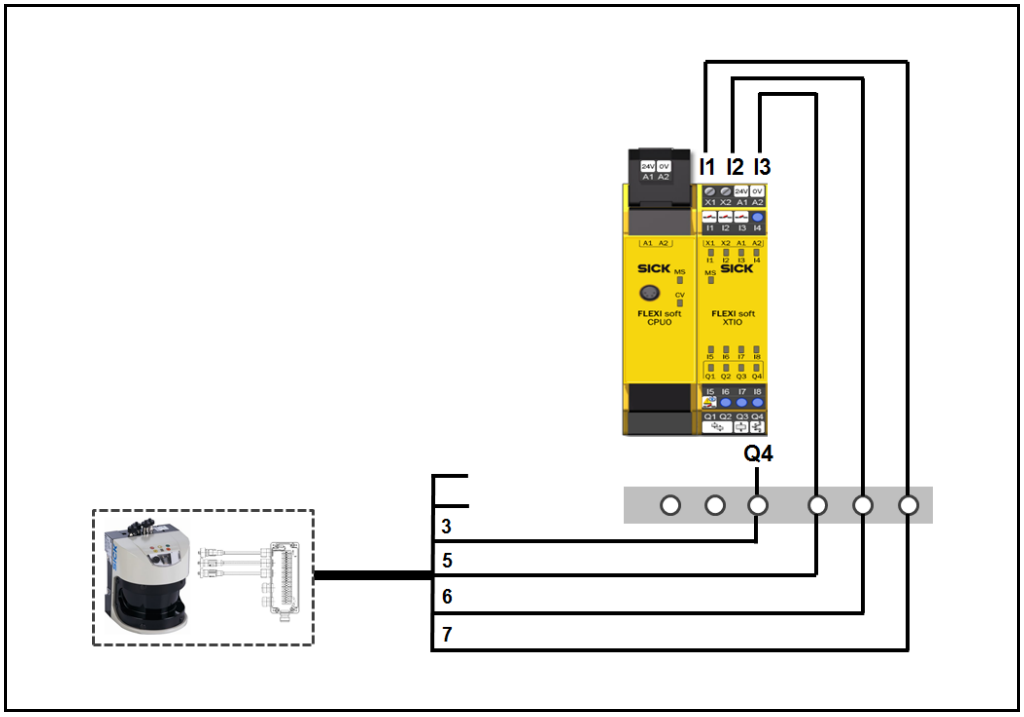

Fig. 26: Wiring the switching inputs and outputs in the control cabinet (LMS511 laser scanner)

▶ Connect the wires to the I/O expansion module as follows:

No.	Connection	I/O expansion module
3	Switching output (test signal to LMS)	Q4
5	Switching input (stop/test field status)	I1
6	Switching input (test/stop field status)	I2
7	Switching input (warning field status)	I3

Tab. 11: Wiring the switching inputs and outputs in the control cabinet (LMS511 laser scanner)

5.2.4 Connecting additional LMS511 laser scanners to Flexi Soft

Connecting a second LMS511 laser scanner to the Flexi Soft takes place as indicated in the following table:

Connection	Voltage supply	I/O expansion module
Voltage	+24 V	
Ground	0 V	
Switching output (test signal to LMS)		Q4
Switching input (stop/test field status)		I5
Switching input (test/stop field status)		I6
Switching input (warning field status)		I7

Tab. 12: Connecting a second LMS511 laser scanner to the Flexi Soft

A second I/O expansion module is required to connect a third and fourth LMS511 laser scanner. Connection follows the same principle as for the first I/O expansion module.

Note The appropriate configuration file for configuring the Flexi Soft control must be loaded according to the number of laser scanner connected. This file is included in the AOS LiDAR scope of delivery.

5.3 Connecting the LMS111 laser scanner

The LMS111 laser scanner can be connected using one of two methods:

- Using the **local connection box** (= scope of delivery).
- Using **system cables** (= existing systems).

5.3.1 Using the local connection box

The connection of the LMS111 laser scanner to the Flexi Soft control takes place via the connection box.

Prerequisites

It is assumed that a separate installation cable has been routed from the control cabinet to the connection box or to the LMS511 laser scanner.

- It is necessary to use a shielded cable.
- The cable must have at least 7 wires.
- You should also include spare wires (e.g., if you wish to energize the heater on the laser scanner separately or lead optional signals).

Note Take into account the voltage drop with long cables, especially when operating the heater.

Cabling principle

The cabling concept is always the same, regardless of whether you are connecting one laser scanner or multiple laser scanners to the control. The number of connected laser scanners is signaled to the Flexi Soft control by the control file provided.

Recommendation Be sure to also observe the **electrical diagrams** contained in the annex to these operating instructions!

5.3.1.1 Connecting the connection box to the LMS111 laser scanner

The connection box and the LMS111 laser scanner are connected via the pre-mounted cables on the connection box.

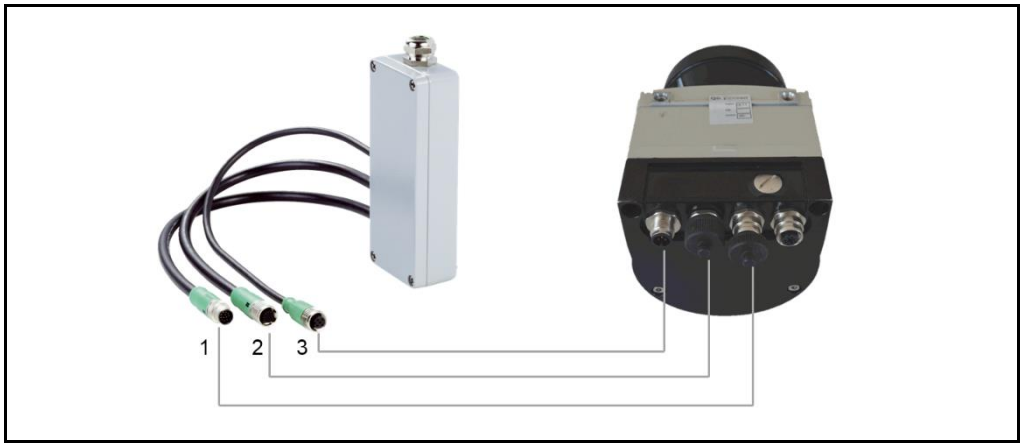

Fig. 27: Connection of the LMS511 laser scanner and the connection box

- Using the M12 round connectors, screw the pre-mounted cables onto the connections on the LMS111 laser scanner as indicated below.

Cable no. (in picture)	Laser scanner connection
1	I/O cable
2	Data/Input cable
3	Voltage supply

Tab. 13: Connection of LMS111 laser scanner and connection box

5.3.1.2 Connecting the installation cable in the connection box

The wires of the routed installation cable must be connected in the terminal block of the connection box on the LMS111 laser scanner.

Note To provide a clearer overview, the wires in the figures below are numbered.

▶ Connect the wires in the terminal block of the connection box as follows:

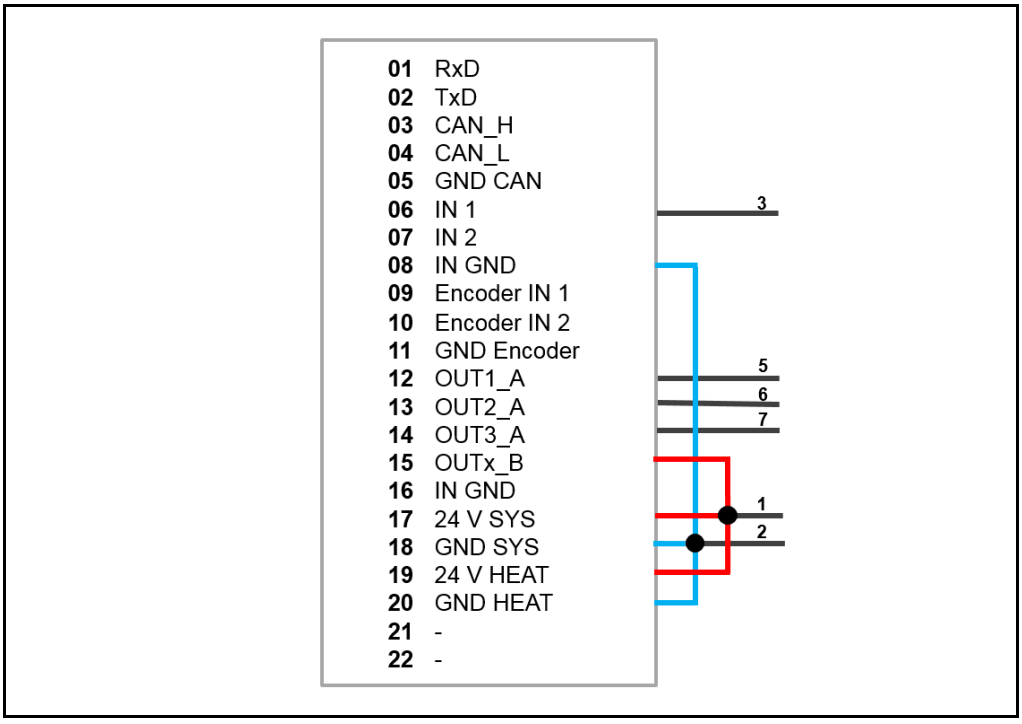

Fig. 28: Connecting wires in the connection box (min. wiring)

Pin	Wire no.	Connection
17	1	Voltage 24 V
18	2	Ground
06	3	Input 1 (test signal from Flexi Soft)
	4	Not assigned (spare)
12	5	Output 1 (stop/test field status)
13	6	Output 2 (test/stop field status)
14	7	Output 3 (warning)

Tab. 14: Connecting wires in the connection box (min. wiring)

Notes

- The wire jumpers indicated for voltage and ground are not contained in the connection box at delivery. You must lay the bridges on the connection side.
- When using a common power supply unit for the sensor and heater, the power supply unit must fulfill the requirements of the sensor part.
- If two separate power supply units are used for the sensor and the heater, terminals 17-19 and 18-20 are not jumpered. The 0-V outputs of both power supply units must be connected for potential equalization.

5.3.1.3 Wiring the installation cable wires to the Flexi Soft control

The individual wires of the installation cable are connected in the control cabinet and wired to the Flexi Soft control module.

Wiring the power supply in the control cabinet

▶ Connect the wires for the power supply to the terminals in the control cabinet.

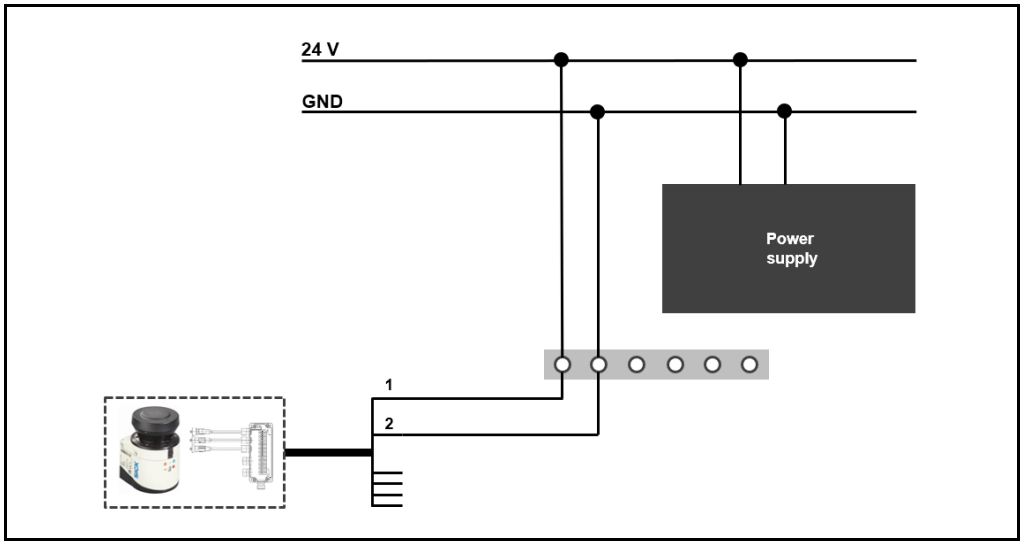

Fig. 29: Connecting the power supply to terminals in the control cabinet (LMS111 laser scanner)

▶ Connect the wires to the power supply in the control cabinet as follows:

No.	Connection	Voltage supply
1	Voltage	+24 V
2	Ground	0 V

Tab. 15: Connecting the power supply to terminals in the control cabinet (LMS111 laser scanner)

Wiring inputs and outputs in the control cabinet

▶ Connect the wires for the input and output switching signals in the control cabinet as follows:

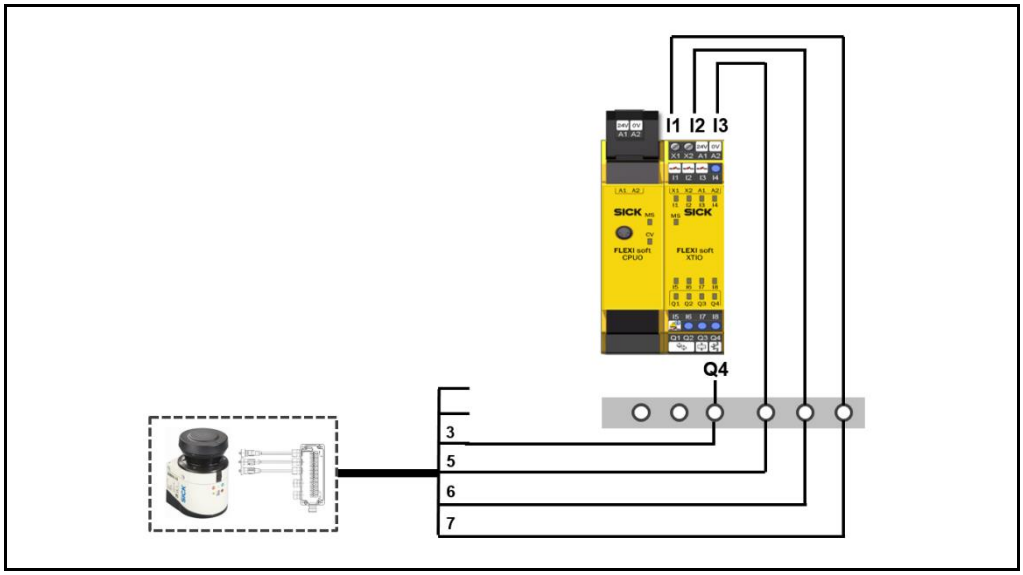

Fig. 30: Wiring the switching inputs and outputs in the control cabinet (LMS111 laser scanner)

▶ Connect the wires to the I/O expansion module as follows:

No.	Connection	I/O expansion module
3	Switching output (test signal to LMS)	Q4
5	Switching input (stop/test field status)	I1
6	Switching input (test/stop field status)	I2
7	Switching input (warning field status)	I3

Tab. 16: Wiring the switching inputs and outputs in the control cabinet (LMS111 laser scanner)

5.3.2 Using the pre-configured system cables

5.3.2.1 Overview of pre-configured system cables

NOTE

The following description is only valid for already-existing systems.

Cabling the LMS111 laser scanner to the Flexi Soft control is done via pre-configured cables. The cables have an M12 plug connector on one side. The other end is open **with** a shield.

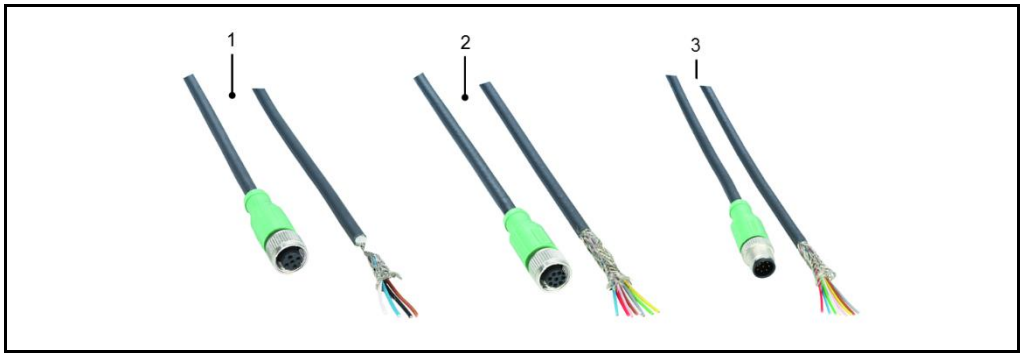

Fig. 31: Pre-configured cables for connecting the LMS111 laser scanner

No.	Cable	Plug connector
1	Voltage supply (female connector – open)	M12 female connector, 5-pin, straight, A-coded, cable, 20 m, 4-wire
2	Data/Input configuration cable, shielded (female connector – open)	M12 female connector, 8-pin, straight, A-coded, cable, 20 m, 8-wire
3	I/O configuration cable, shielded (male connector – open)	M12 male connector, 8-pin, straight, A-coded, cable, 20 m, 8-wire

Tab. 17: Pre-configured cables for connecting the LMS111 laser scanner

5.3.2.2 Wiring the system cables in the control cabinet

The cabling concept is always the same, regardless of whether you are connecting one laser scanner or multiple laser scanners to the control.

The number of connected laser scanners is signaled to the Flexi Soft control by the control file provided. The file is transferred to the control using Flexi Soft Designer.

1. Screw the M12 round connector on the LMS111 laser scanner onto the corresponding connector.
2. Run the cable to the control cabinet.
3. Connect the wires to the terminals of the control cabinet and wire the terminals accordingly.

Recommendation

Be sure to also observe the **electrical diagrams** contained in the annex to these operating instructions!

Voltage supply cable

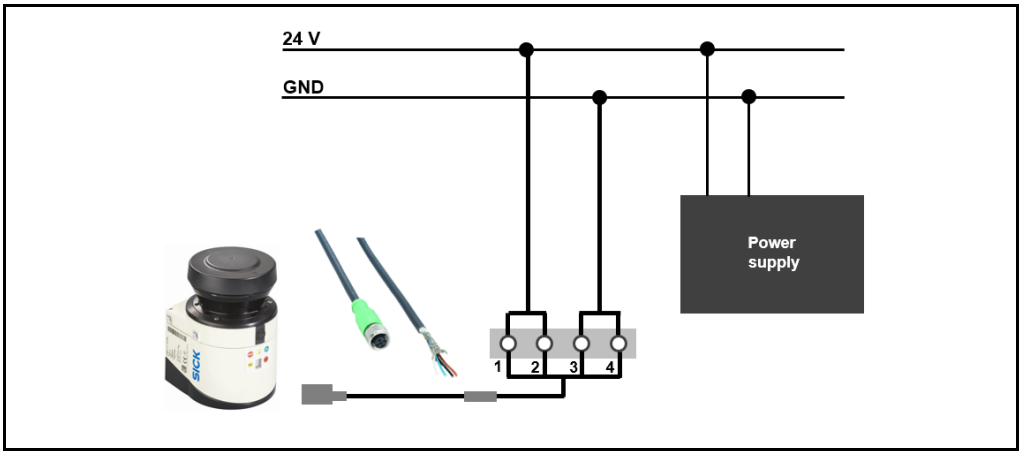

Fig. 32: Wiring the power supply cable (LMS111 laser scanner)

No.	Wire color	Connection	Potential
1	Brown	Sensor	+24 V
2	White	Heating	+24 V
3	Blue (yellow)	Ground sensor	0 V
4	Black (green)	Heating ground	0 V

Tab. 18: Wiring the power supply cable in the control cabinet (LMS111 laser scanner)

Notes

- In the configuration cables, the ground and heater ground wires are either blue and black or yellow and green.
- If using a shared power supply unit for the sensor and heater, then the corresponding terminals must also be jumpered. The power supply unit must fulfill the requirements of the laser measurement sensor.

Data/Input cable and I/O cable

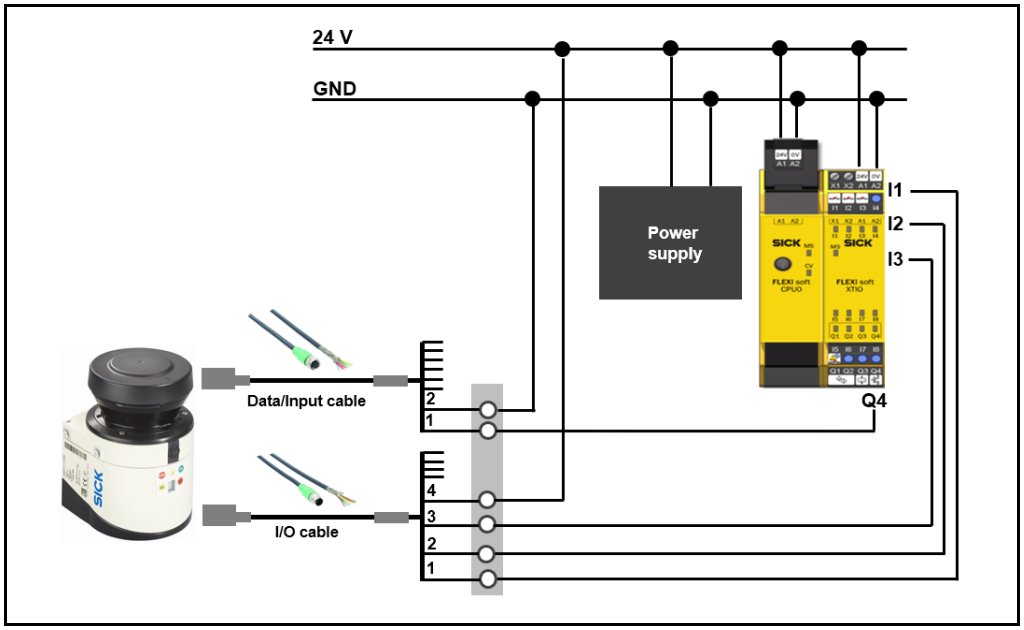

Fig. 33: Wiring the data/input cable and I/O cable in the control cabinet (LMS111 laser scanner)

No.	Wire color	Connection	Control
Data/Input cable			
1	Pink	LMS input	Q4
2	Red	GND	
I/O cable			
1	Yellow	Output on LMS	I1
2	Gray	Output on LMS	I2
3	Pink	Output on LMS	I3
4	Blue	+24 V	

Tab. 19: Wiring the data/input cable and I/O cable in the control cabinet (LMS111 laser scanner)

Note The other wires are not used by the AOS LiDAR.

► Insulate the open ends.

5.3.3 Connecting additional LMS111 laser scanners to the Flexi Soft

Connecting a second LMS111 laser scanner to the Flexi Soft takes place as indicated in the following table:

Wire color	Connection	Control
Power supply cable		
Brown	Sensor +24 V	
White	Heater +24 V	
Blue (yellow)	GND sensor	
Black (green)	GND heater	
Data/Input cable		
Pink	Input on LMS	Q4
Red	GND	
I/O cable		
Yellow	Output on LMS	I5
Gray	Output on LMS	I6
Pink	Output on LMS	I7
Blue	+24 V	

Tab. 20: Connecting a second LMS111 laser scanner to the Flexi Soft

A second I/O expansion module is required to connect a third and fourth LMS111 laser scanner. Connection follows the same procedure as for the first I/O expansion module.

Note The appropriate configuration file for configuring the Flexi Soft control must be loaded according to the number of laser scanner connected. This file is included in the AOS LiDAR scope of delivery.

5.4 Connecting additional I/O modules

It is possible to attach additional XTIO modules, depending on the configurations and options. In total, the control can be used to operate up to 12 modules (144 I/O signals).

6 Commissioning

6.1 Switching on the supply voltage

Switch on the power supply of the object detection system.

The system starts up automatically when the power supply is connected.

Checking operating state

All AOS LiDAR components are thoroughly checked for operating state

The LED display for the connected laser scanner indicates the device status during the power-up cycle.

Operating state after 60 s

The system is ready for operation after approximately 60 seconds.

6.2 Checking the operating state of the components

Once all components have been connected properly, it is possible to check whether all devices are ready for operation after the system starts up.

6.2.1 Checking the operating state of the modular control

After system startup, the following LEDs should be illuminated on the Flexi Soft control:

Fig. 34: Checking the operating state of the Flexi Soft control

No.	LED	Display	Meaning
1	MS (main module)	**Flashing red**	The LED flashes red. No configuration has been loaded yet.
2	CV (main module)	**Yellow**	The LED flashes yellow. The configuration has not yet been verified in the control.
3	MS (expansion module)	**Flashing red**	The LED flashes red.

Tab. 21: First functional test of the system

Note The switching input and output LEDs are illuminated according to the field status of the connected laser scanners.

6.2.2 Checking the operating state of the laser scanners

With a green LED (1), the laser measurement sensor indicates that it is ready for operation. The **OK** LED must also be illuminated. The 7-segment display is blank.

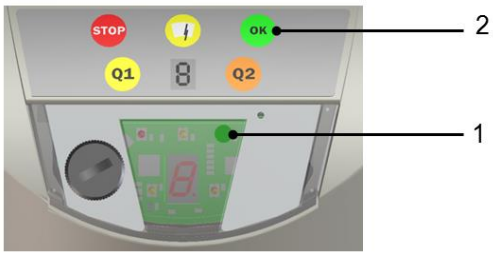

Fig. 35: Checking the operating state of the laser scanners

6.3 Configuring laser scanners using SOPAS

6.3.1 Overview

The AOS LiDAR comes with pre-configured parameters for the laser scanners. The parameters are already located on the corresponding laser scanners.

Each parameter set, in addition to additional optional fields, contains the three basic monitoring fields **stop**, **test** and **warning**, along with a predefined field geometry.
The geometries and positions of these fields must be adapted to the existing conditions on-site.

Each monitoring field is already linked with an evaluation case with an accompanying application condition and the assignment to the particular switching output.
The evaluation cases are standardized and do **not** normally need to be changed.

Pre-configured LMS511 evaluation cases

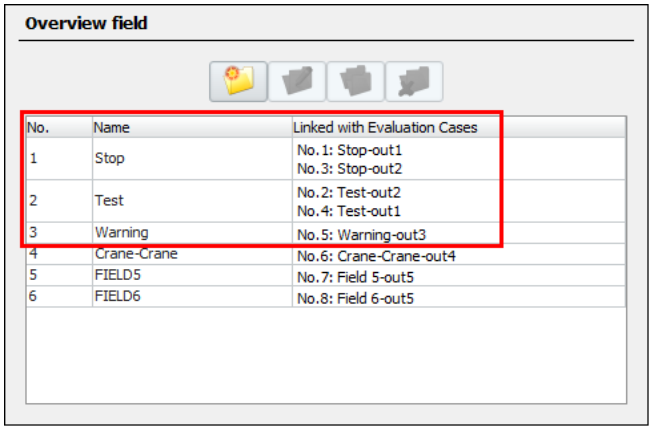

Fig. 36: Pre-configured LMS511 evaluation cases (red = AOS basic function)

Pre-configured LMS111 evaluation cases

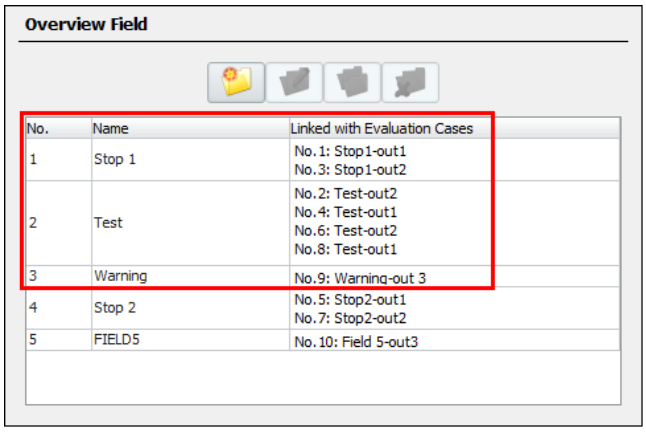

Fig. 37: Pre-configured LMS111 evaluation cases (red = AOS basic function)

The interactive configuration of the monitoring fields takes place on-site using the SOPAS configuration software provided. You can use the software to adjust the properties, evaluation responses and output properties of the system as needed.

Notes

- For standard operation of the AOS LiDAR, the field geometries in the laser scanner only need to be adapted to the local conditions. All other parameters are already set.
- Evaluation cases and necessary filter settings and settings for the contamination message are already configured in the laser scanners. These do not need to be adjusted in the standard operating mode.

Evaluation case	Laser scanner input (changeover signal)	Active field	Laser scanner output
1	0	Stop	1
2	0	Test	2
3	1	Stop	2
4	1	Test	1
5	Not relevant	Warning	3

Tab. 22: AOS basic function evaluation cases

6.3.2 Preparation work

6.3.2.1 Installing SOPAS

Install the latest version of the configuration software from the SICK homepage on the configuration PC.

1. Open the www.sick.de website in the browser.
2. Enter SOPAS in the search field and start the search.
3. Download the latest version of the **SOPAS Engineering Tool** software and save this in a temporary directory on the configuration PC.
4. Start the installation by double-clicking the **setup.exe** file.

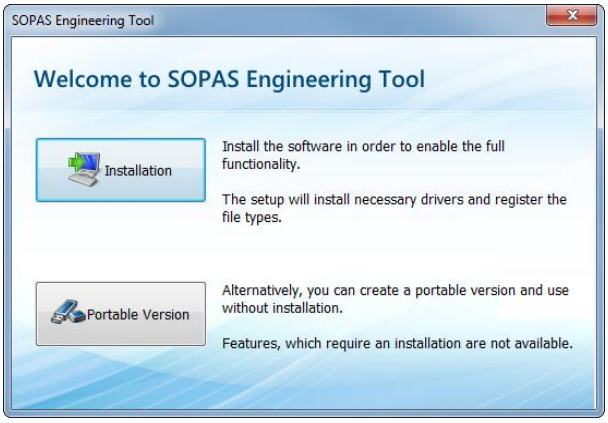

5. Select the **Installation** installation type. The installation is prepared.
6. Select the user language of the wizard.

7. Click **OK** to confirm. The Setup Wizard opens.

8. Follow the Setup Wizard and perform the installation. Depending on the configuration, a program group is created and an icon is placed on the desktop.

6.3.2.2 Establishing a connection with the configuration PC

The system is configured using a configuration PC that is temporarily connected to the respective laser scanner by an Ethernet cable.

Fig. 38: Connecting the laser scanner and the configuration PC

Note The laser scanners are supplied with the default IP address (192.168.0.1).

- Make sure that the configuration PC is in the number range of the laser scanner. If not, change the IP address of the configuration PC accordingly.

6.3.2.3 Launching SOPAS

You have already connected the configuration PC to the Ethernet switch.

- Launch SOPAS. The corresponding icon is located in the Windows start menu and on the desktop by default.

The initial screen is displayed. A new project is automatically created in SOPAS.

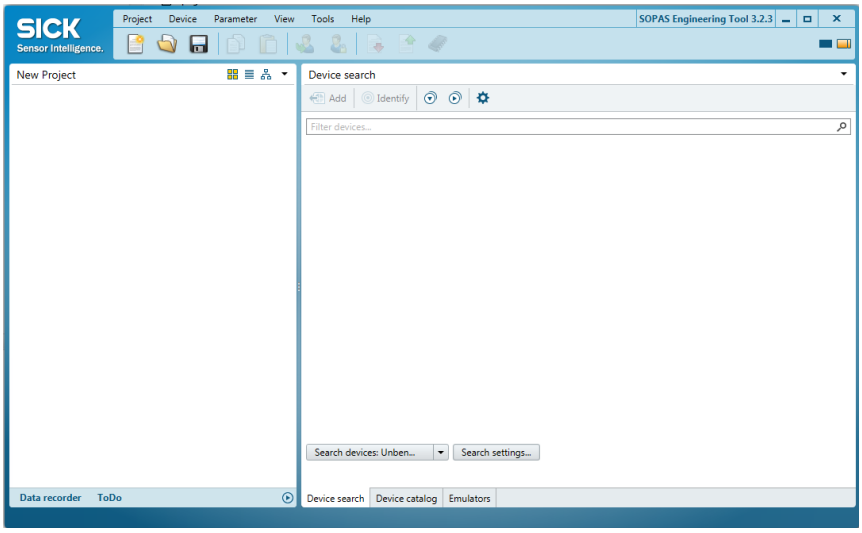

One or more devices are combined and edited in a single project.

6.3.3 Loading laser scanners into the SOPAS project

6.3.3.1 Starting the device search

Use the device search to add the connected laser scanner to a project.

Configuring the device search

1. Click the **Search settings** button. The Connection Wizard starts. This helps you to establish a link with a connected device.
2. Select the **Device family oriented search** option and click **Next** to confirm.

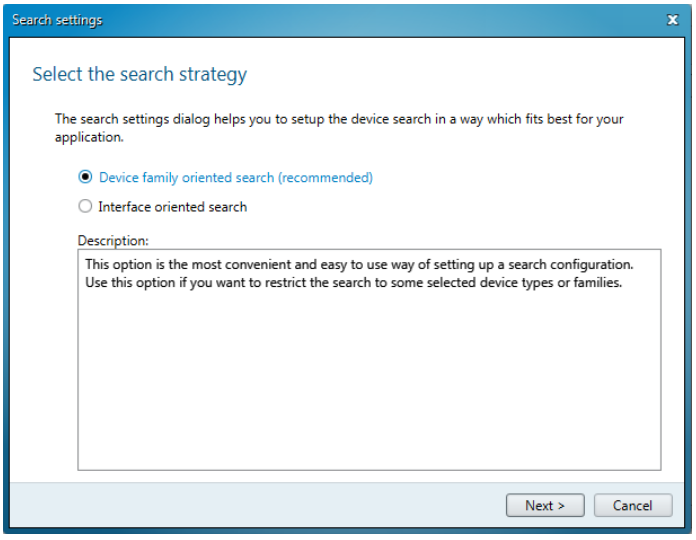

3. Depending on the device type, select devices families **LMS1xx** or **LMS5xx/25x** in the list to limit the device search to this device type. Click **Next** to confirm your selection.

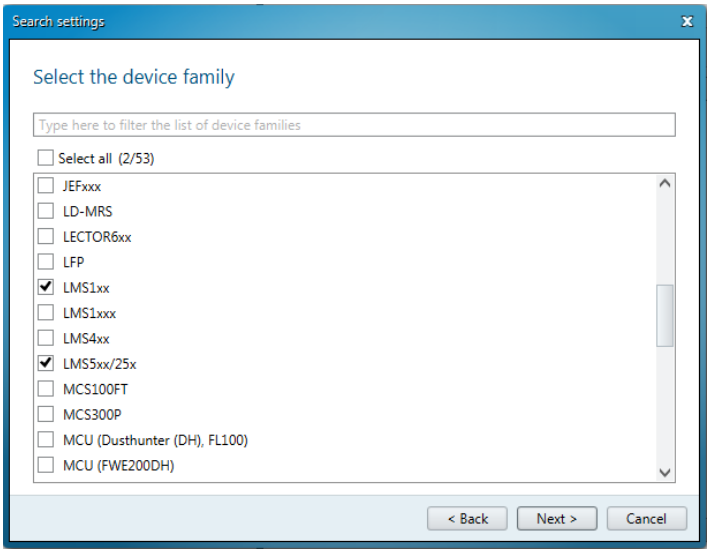

4. Specify which interface is to be used for the configuration work. Since configuration is done via an Ethernet cable, the check mark in activated in **Ethernet communication (TCP/IP)**.

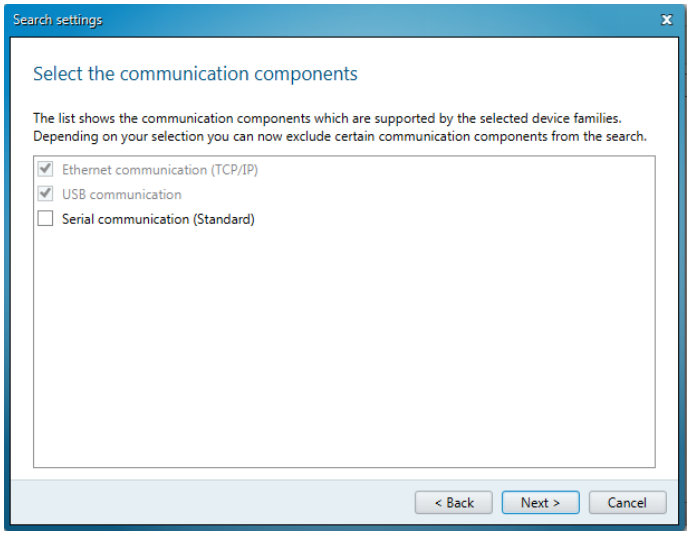

5. Confirm the following pages of the wizard by pressing **Next** each time and click **Complete** to finish configuring the search settings.

Starting the device search

► Click on the **Search devices** button.

If the number ranges for the configuration PC and the laser scanner correspond, then the connected laser scanner is detected and displayed in the right side of the list of connected devices with its device name.

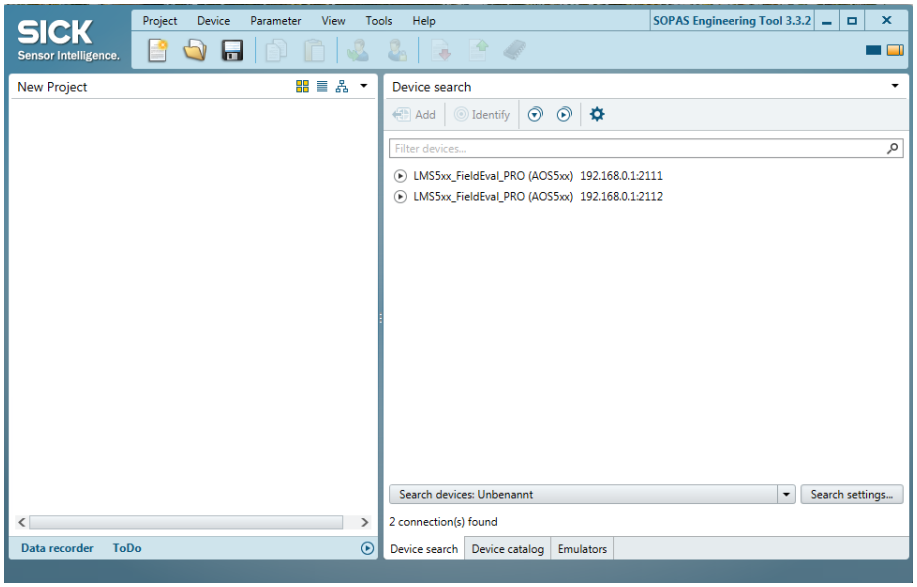

Note The laser scanner (like all SICK devices) uses two ports. Ports are part of the network address and can be used to establish various connections between the devices. Port **2112** is freely configurable but port **2111** is a fixed port for outputting data. It is used for device configuration.

6.3.3.2 Adding the detected laser scanner to a SOPAS project

1. Mark the detected laser scanner with port **2111** in the list.
2. Click the **Add** icon to transfer the laser scanner into the project. Alternatively, you can transfer by double-clicking on the list entry or dragging and dropping.

The transferred laser scanner is displayed in the left-hand window as a **tile**.

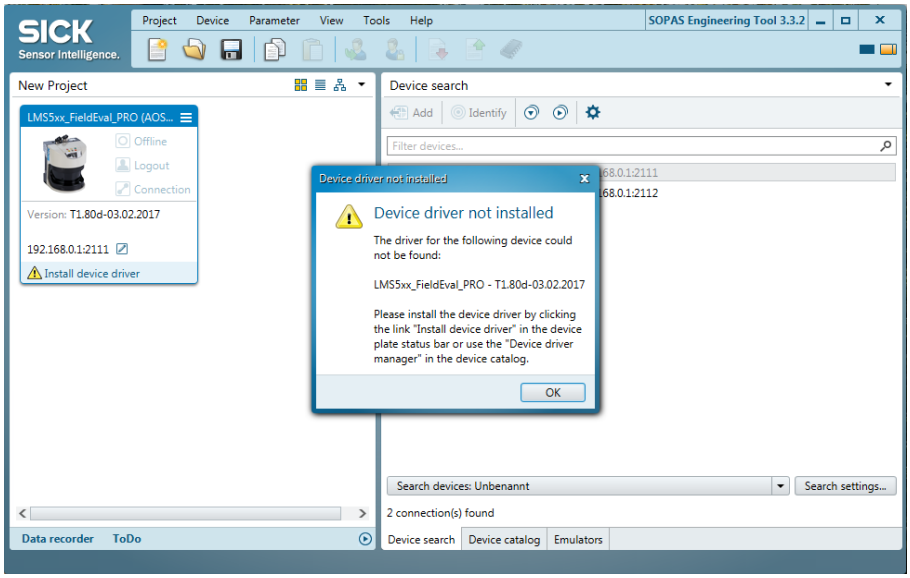

Note A (one-time) note will appear if the device drivers for the laser scanner are not yet known in the SOPAS project. If the device has already been used, this note does not appear.

6.3.3.3 Loading device drivers into the SOPAS project

Install the device driver for the laser scanner. The device drivers can be transferred directly from the device to SOPAS.

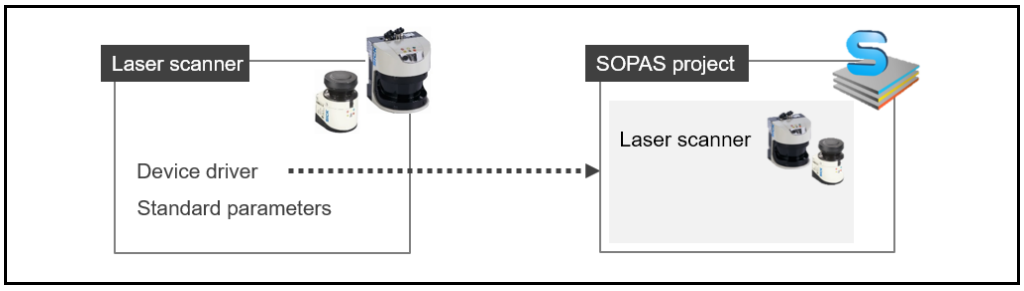

Getting started

1. Press **OK** to confirm you have seen the notification.
2. Click **Install device driver** in the tile.

3. You will be asked where you want to get the device drivers from. Load the device drivers from the device and select the **Device upload** option.

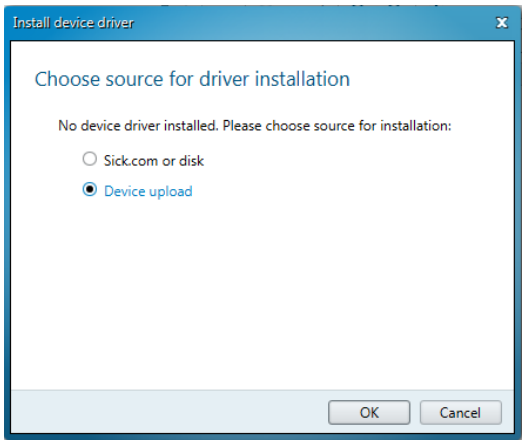

4. Click **OK** to confirm. The device drivers are loaded in the SOPAS project.

It can be inferred from the tile of the laser scanner that the device is now recognized by the configuration PC but is possibly not yet connected, meaning that it is still **offline**.

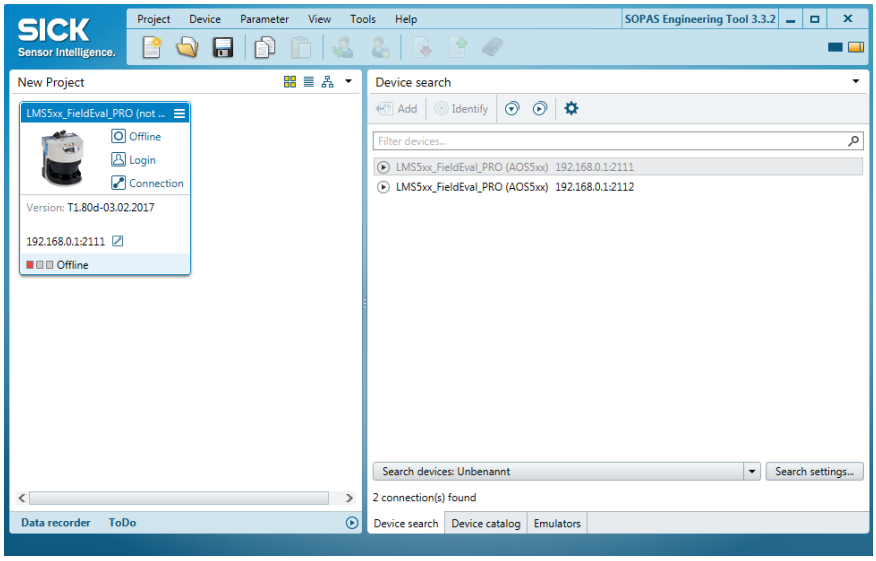

6.3.3.4 Opening laser scanners in SOPAS

During the initial commissioning, the standard parameters saved on the laser scanner at the factory are transferred to the SOPAS project and then adapted to the requirements of the relevant application there.

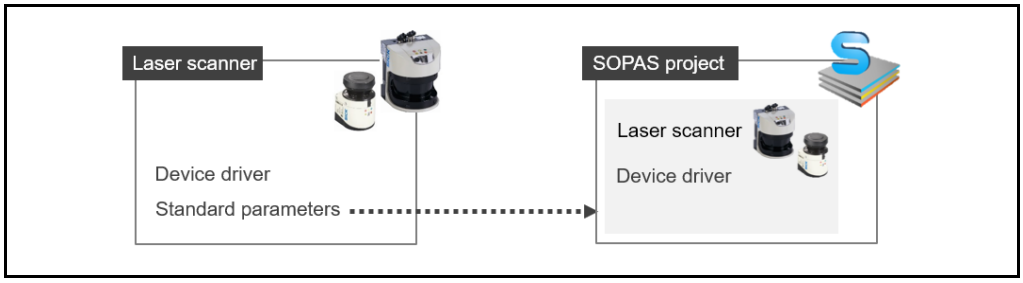

Fig. 39: Loading standard parameters into the SOPAS project

1. Click the **Offline** button in the device tile.

   Alternatively, you can open the context menu and select the **Go online** command there.
2. You are prompted to synchronize the laser scanner's device data with the device data of the SOPAS project.

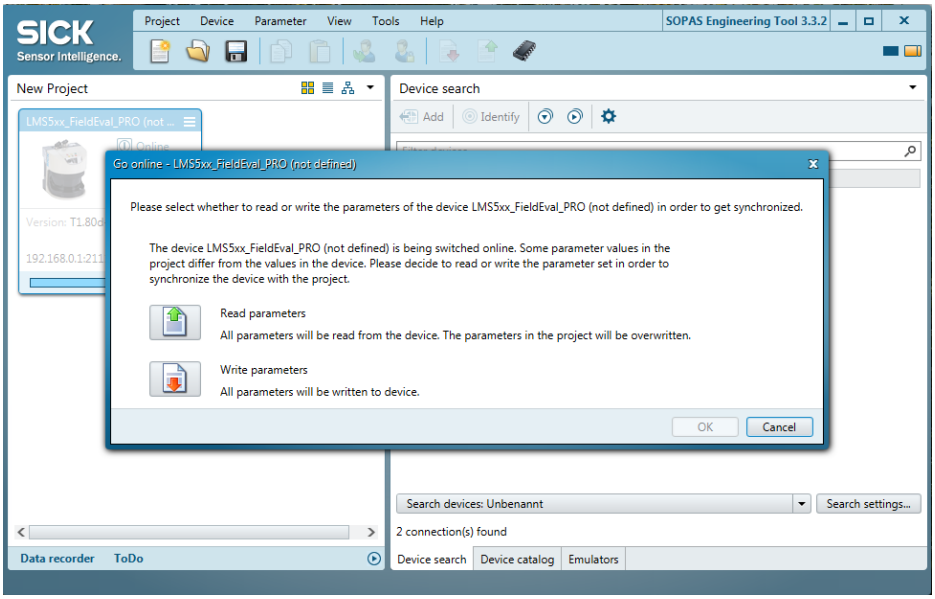

3. As the standard parameters are currently only available in the laser scanner and are not yet in the SOPAS project, click the **Read parameters** option.

The connection between the laser scanner and the configuration PC is now established. The standard parameters are transferred from the laser scanner into the SOPAS project.

Online appears in the tile. The LED lights up green.

Opening the configuration interface of the laser scanner

► Double-click on the device symbol or on the upper blue frame of the tile.

A separate editing window of the laser scanner opens.

6.3.4 Notes on the configuration interface

6.3.4.1 The project tree of the device description

All configurable parameters of the laser scanner are compiled together in a corresponding device description for the SOPAS configuration software. The project tree of the device description is used as an aid for configuration.

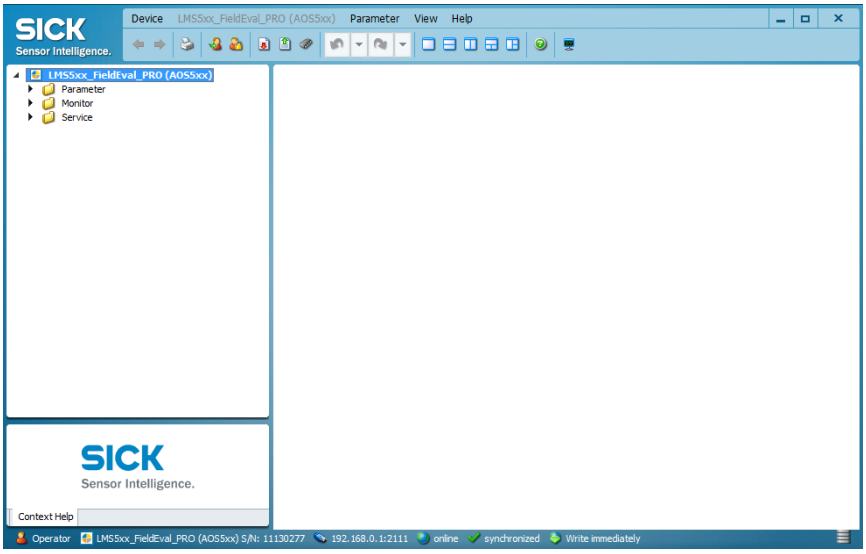

You can open the individual functional areas of the configuration via the project tree structure.

1. Click the plus symbol to expand the tree.
2. Select a functional area in the project tree. The right-hand side shows the input fields with the loaded standard parameters.

Note Depending on the SOPAS version, individual contents of the dialog window and their position could deviate. The general operation of the device parameters is the same, however.

6.3.4.2 Logging in to the laser scanner

To be able to configure the laser scanner with the SOPAS configuration software, you must log into the device using the **Authorized client** user level.

After the first start-up, the configuration software works with the **Maintenance technician** user level (= operator level).

1. Select the **Device → Login** command in the menu bar.

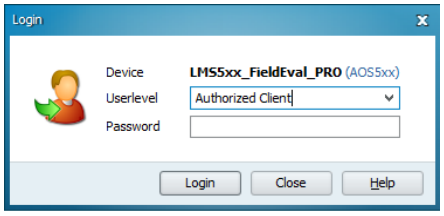

2. In the Login dialog window, select the **Authorized client** user level and enter the default password **client**.
3. Click **Login** to confirm your entry.

   The parameters that were previously shown grayed out in the windows are now accessible.

6.3.4.3 Saving device parameters

All parameters which you enter in SOPAS are transferred to and executed on the connected laser scanner with the **Immediate download** option. However, the data is only saved **temporarily** in the laser scanner.

Saving the configuration permanently

To retain the changes after the laser scanner is restarted, the configuration must be permanently saved in the laser scanner.

1. After configuration, go to the SOPAS toolbar and click the **Permanently save parameters** icon. The configuration is transferred to the laser scanner and saved there permanently.
2. The configuration that is saved permanently in the device is loaded whenever the laser scanner is restarted.

6.3.5 Configuring monitoring fields

6.3.5.1 Checking the identification of the surrounding contour

Verify that the laser scanner accurately reproduces the surrounding contour.

Getting started

▶ Select the following item from the SOPAS project tree:
LMSxxx → Monitor → Field evaluation monitor.

They detect the laser scanner and the blue scan line of the surrounding contour scanned by the laser scanner. The light gray area depicts the area behind the laser scanner that is not scanned by the laser scanner. With the LMS511 laser scanner, scanning takes place within a 190 ° sector.

In addition, the monitor also visualizes the monitoring fields which you later configure (in the example of the stopping and the test field).

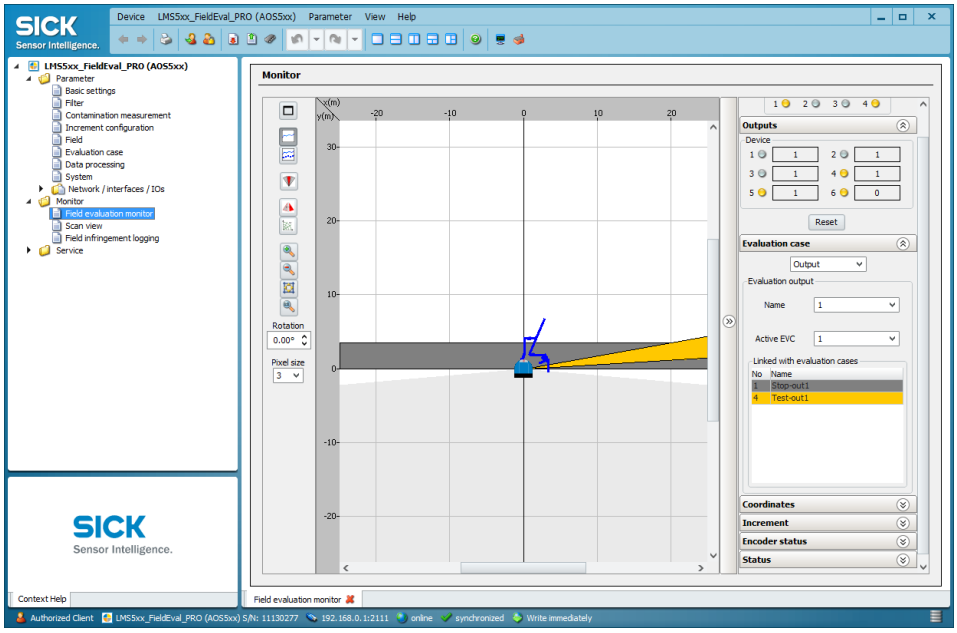

Adjusting view of scanning area

Using the vertical toolbar in the window, adjust the view of the scanning area so that it corresponds to the real conditions.

- If the scan lines of the laser scanner are not displayed, click on the **Display scan line** icon in the toolbar. The scan lines of the surrounding contour scanned by the laser scanner are now visible.

- Click the **Show all active points** icon to set the optimum display area. The display area is now filled by the laser scanner with all the scan lines and the monitoring fields.

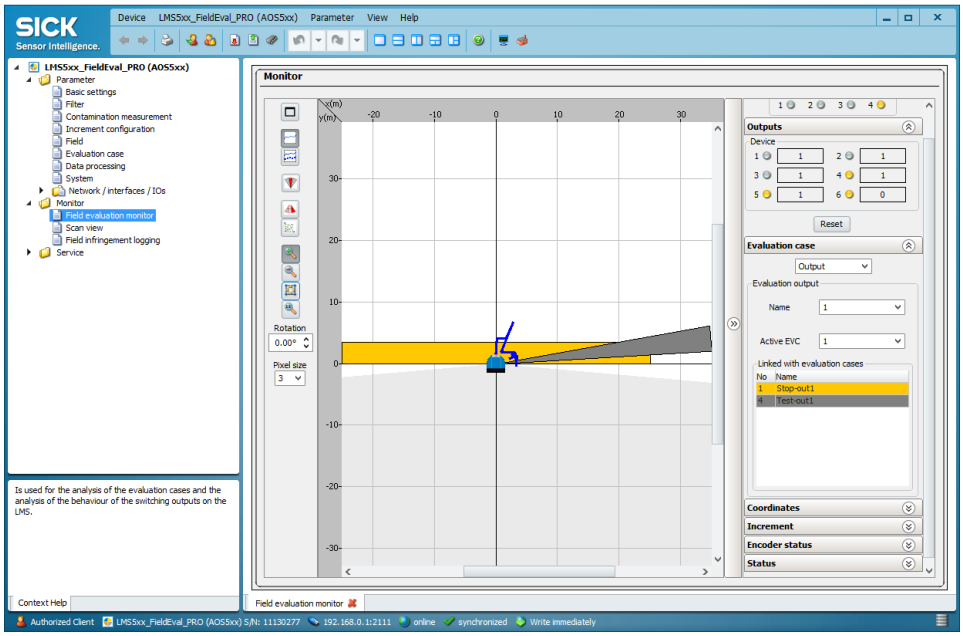

- If you click on the double arrow on the right edge of the monitor window, the right area with the display of the outputs and evaluation cases is hidden. This offers more space on the screen for displaying the laser scanner and the scanned surrounding contour.

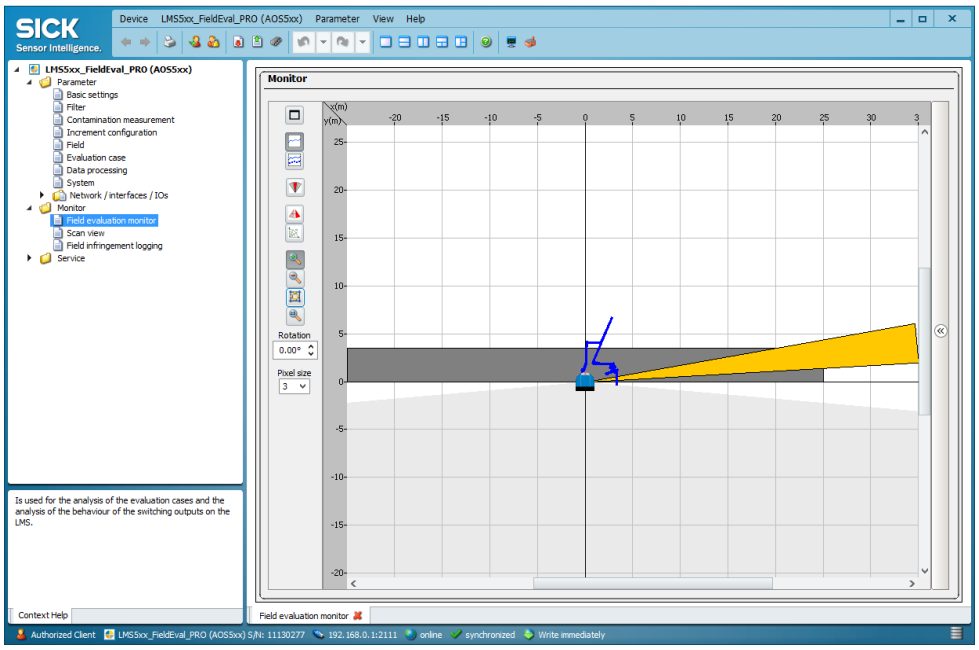

Clicking on the double arrow again displays the right area.

- If you click on the **Full-screen presentation** icon in the toolbar, the Monitor window is displayed over the entire screen.

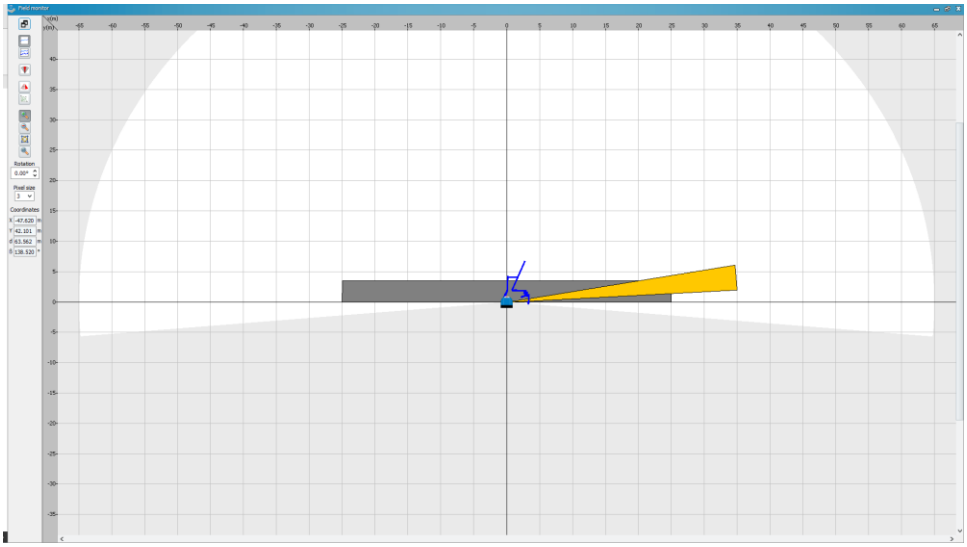

You can return to the previous displaying by clicking on the **Close full-screen presentation** icon.

Placing an object in the measuring range

- You can test the display by purposefully placing an object in the measuring range and examining the result on the monitor.

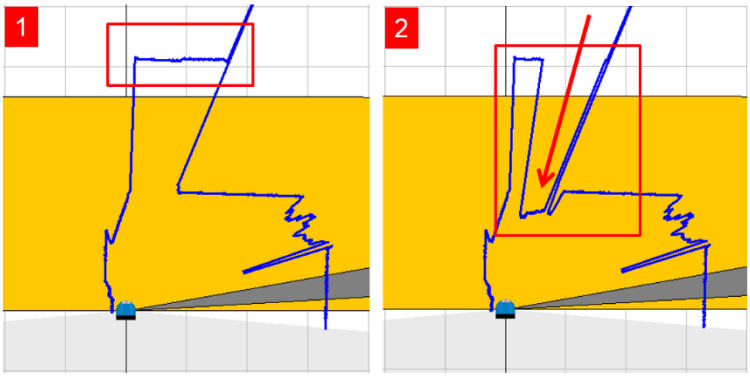

- Check whether the scan line moves together with the object and accurately reproduces the modified surrounding contour (arrow).

6.3.5.2 Selecting a monitoring field for editing

The laser scanner is preconfigured at delivery. The three essential monitoring fields for the AOS LiDAR (**stop**, **test** and **warning**) are provided and already linked to the corresponding evaluation cases.

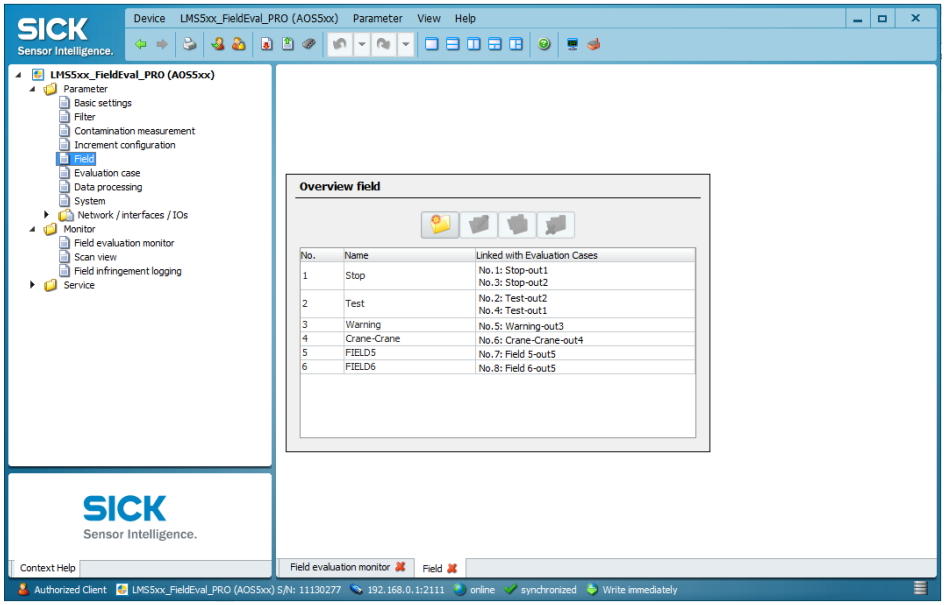

You only need to adjust the field size and the geometry of the fields to the conditions at your site.

Selecting a field for editing

1. Select the following item from the SOPAS project tree:
   LMSxxx → Parameters → Evaluation fields
2. In the overview table, select the field that you wish to adjust in the first step (the **test** field in the example).

3. Click the **Edit** icon. The wizard for configuring the field end points opens.

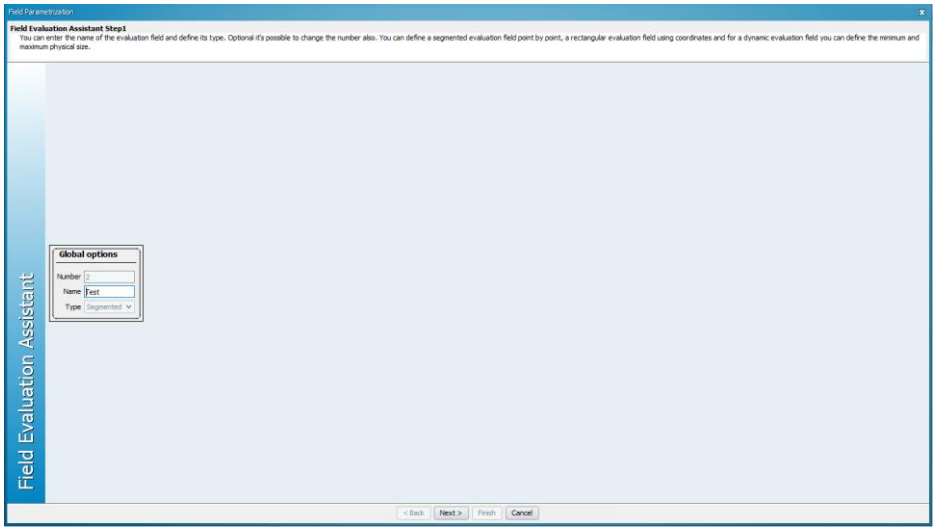

4. The name of the selected field is completed automatically. The field type is **Segmented**. It is not possible to change the field type here.
5. Click **Next** to move to the next page. There, you will see a display of the spatial conditions as detected by the laser scanner.

6.3.5.3 Displaying the spatial situation on the screen

Scale the spatial situation on the screen such that you can adjust and place the geometry of the test field.

Note The setting of the view of the scanned area is not saved. You must repeat the setting whenever SOPAS is restarted. The same applies if you switch to a different tab.

Getting started

In the example below, you have opened the scanning area for the **test** field. You can see the laser scanner with the scan lines and the predefined geometry of the test field.

The relevant field points determine the geometry of the field and are indicated by green squares. All points can be edited separately, and new points can be added with the click of a mouse.

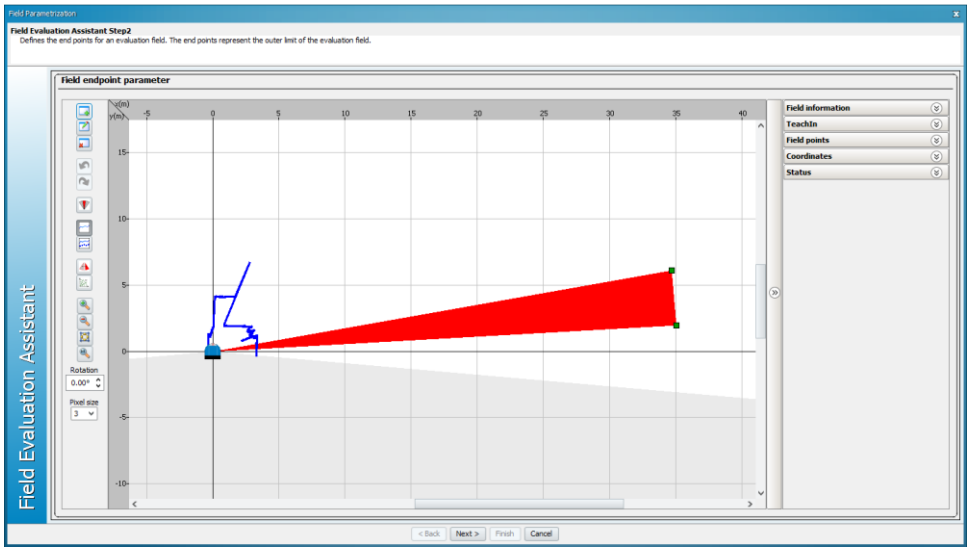

Note If the scan lines of the laser scanner are not displayed, click on the **Display scan line** icon in the toolbar.

Zooming in/Zooming out display area

Select a display area that allows you to clearly identify the scan lines and the geometries of the monitoring field. To do this, use the **Zoom in** and **Zoom out** functions.

1. Click on one of the two icons. The mouse cursor is now a magnifying glass icon.
2. Now click on the display area. Every click of the mouse causes the display to zoom in or zoom out.

   The zooming in/zooming out always originates at the position of the mouse cursor.

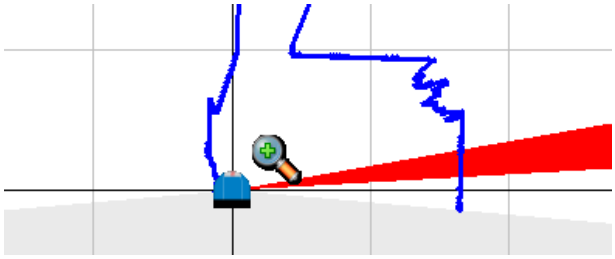

3. Click again on the magnifying glass to switch off the zoom function.

Note The scale of the coordinate system automatically adapts to the current zoom level.

Additional settings

The following functions are available along with the field monitor in the field editor.

- Click on the **Display all active points** icon to zoom in or zoom out on the view of all active points of the monitoring field.

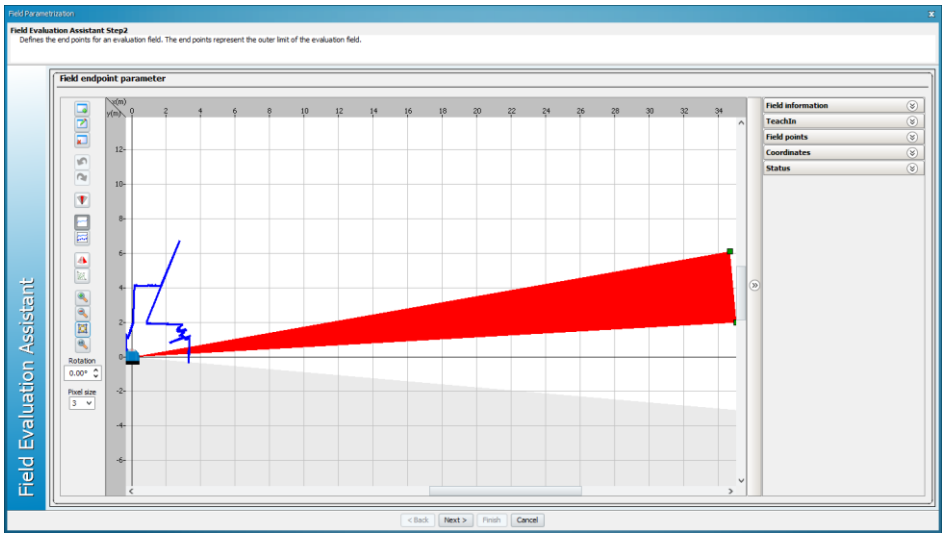

- By clicking on the **Display maximum sight range of the sensor** icon, the display area shows the laser scanner with all scan lines and the monitoring fields.

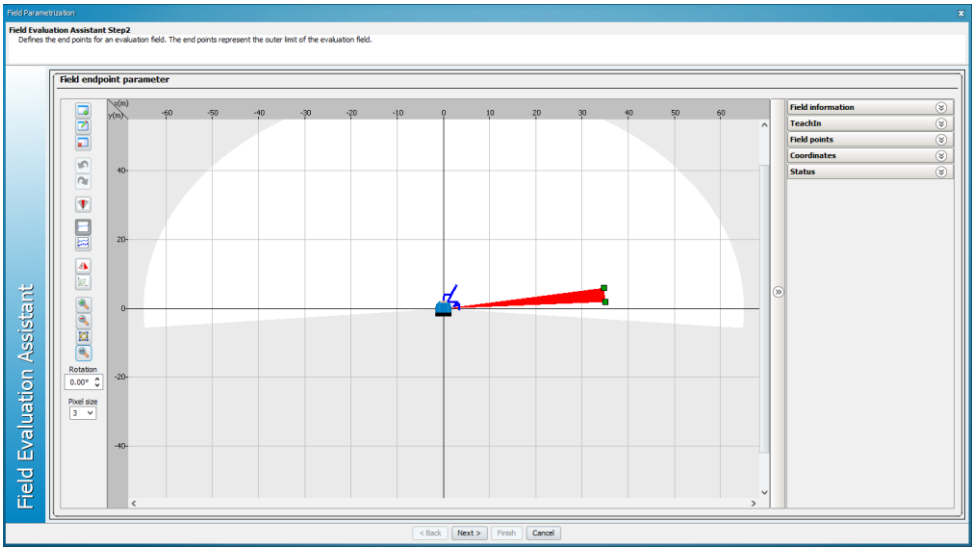

Rotating the display area

Depending on the mounting situation of the laser scanner, you can rotate the view of the field editor for better orientation. To do so, use the **Rotation** field.

- Enter the angle of rotation of the view in the input field.
- Change the angle of rotation of the view step-by-step in the clockwise direction with the arrow buttons to the right next to the field.

Note

- If necessary, click again on the **Show all active points** icon.

6.3.5.4 Adjusting the size and position of the evaluation fields

Once you have accurately depicted the spatial situation in the screen detail, you can modify the size and position of the evaluation fields.

Helpful orientation guides

- Pay attention to the grid, which acts as a useful measuring guide.
- To further orient yourself, you can place an object on a desired point within the measuring range in order to view this point as a measurement.

Changing the field size and field position

1. Click the **Edit field point** icon.
2. Click on one of the green points. This point is now displayed as a blue square and can be edited.
3. Click again on this point and move it into view while pressing the mouse button.

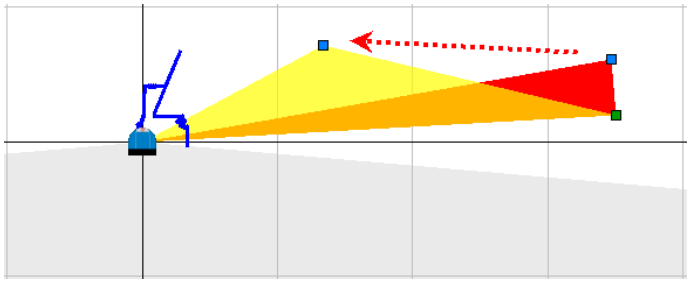

4. Select a display that allows you to clearly recognize the position of the test target.
5. In this example, the test target is a pole (see arrow).

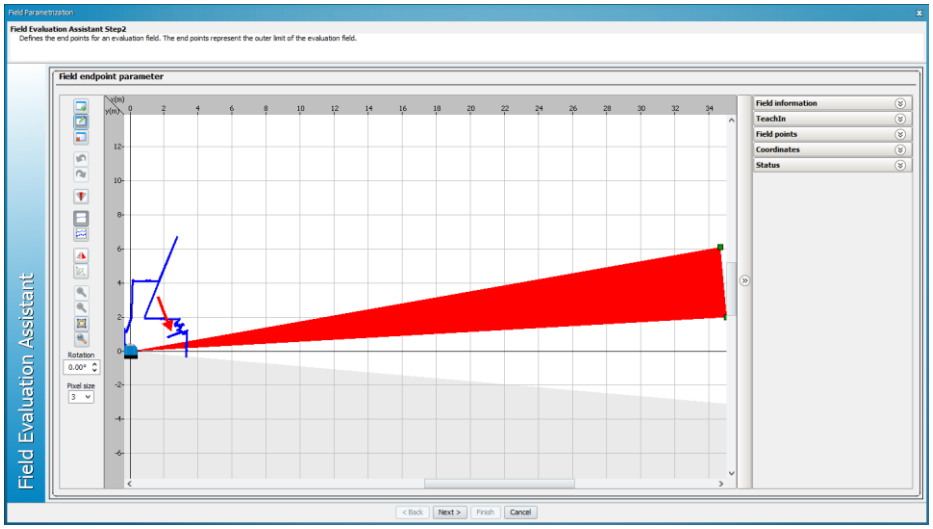

Tip If you are unsure about whether you have recognized the test target position from the surrounding contour, hold an object in front of the test target. The surrounding contour must change accordingly.

6. Position the test field on the test target. Make sure that you clearly hit the test target with the test field. The width of the test field on the test piece should be at least 100 mm.

Tip Choose a field that is wider than the test target to compensate for any mechanical oscillations.

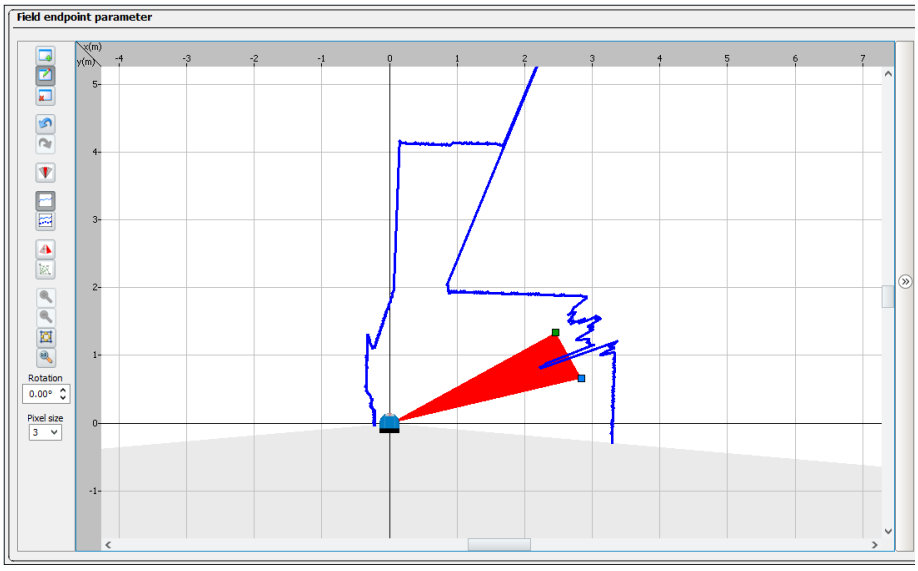

Warning The test field must not touch the contour of a wall or any other object.

7. As an alternative to graphical editing, you can also enter the field coordinates as numerical values on the right-hand side of the window. To do this, display the **Field points** and **Coordinates** area.

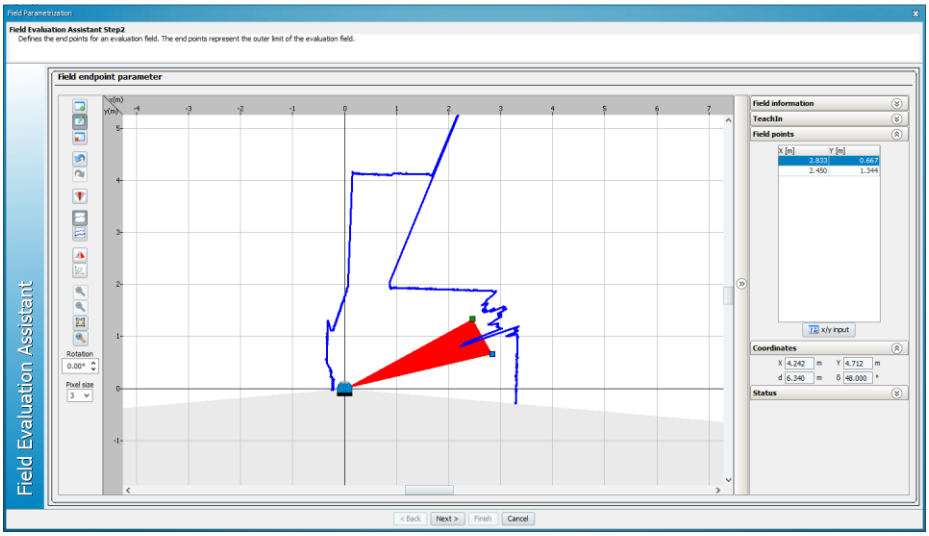

8. Click on **Next** and close the editing area of the first field with **End**. The software takes you back to the list of fields.

Editing the stopping field / warning field

► Adjust the stopping field and the warning field to the spatial conditions according to the steps described above.

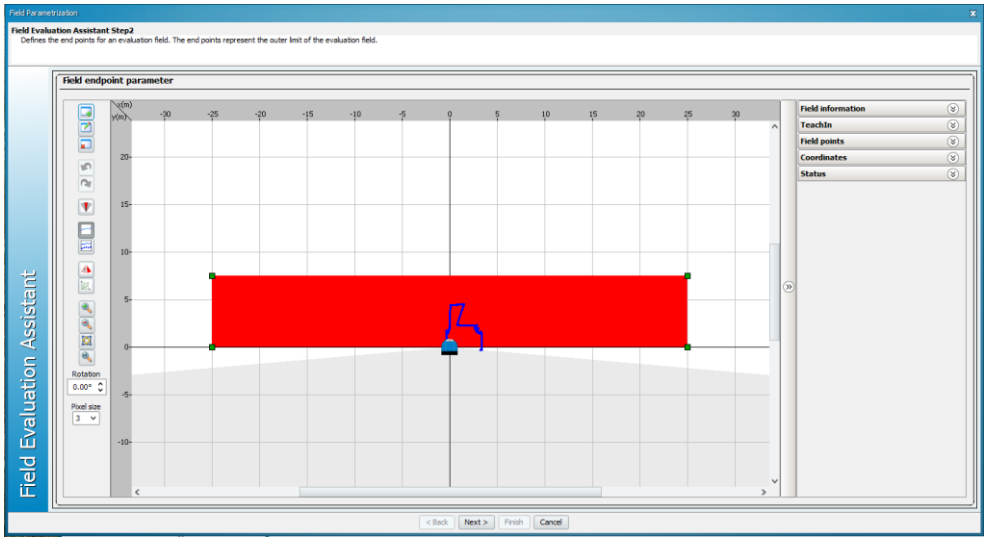

Note You must ensure that the test target lies outside of the stopping field. Otherwise, the AOS LiDAR self-monitoring may not function as a result of the switch in the assignment of the stopping field and test field to the switching output.

Displaying multiple fields

When editing the field geometries and field positions, you may find it useful to also display the other fields in the screen detail.

1. Click the **Display additional fields** icon. A window listing the other fields appears on the screen.
2. Check all the fields that you want displayed in addition to the one you are currently editing. The relevant field(s) appear(s) immediately.

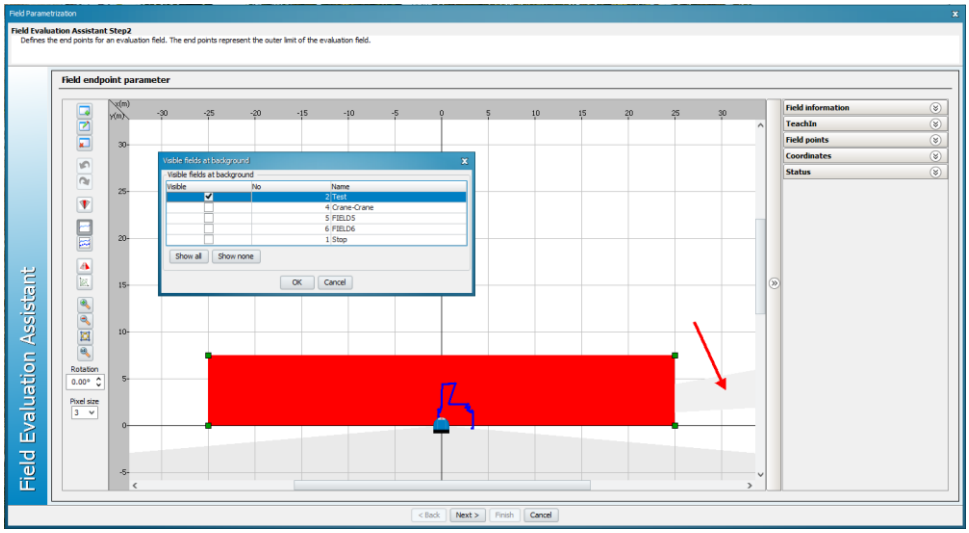

3. Close the **Background fields** window by clicking **OK**.

Overview of the field editing icons

Icon	Meaning
	Adds an additional field point to the field.
	Activates the movement of an existing field point.
	Deletes an existing field point.
	Undoes or redoes the last action.
	Makes other fields visible. A selection list appears.
	Switches the scan lines of the laser scanner on and off.
	Makes the measuring points visible.
	Flips the display. Used for orientation depending on the installation situation.
	Switches over the coordinate system (polar/Cartesian).
	Zooms the display area in or out in steps. The zooming in/zooming out always originates at the position of the mouse cursor.
	Zooms the view of all scan lines and all active points of the monitoring fields in or out.
	Displays the maximum sight range of the laser scanner.
0,00°	Rotates the entire display around the set angle or in steps in the clockwise direction using the arrow buttons.

Tab. 23: Field editing toolbar in SOPAS

6.3.6 Configuring evaluation cases

Each of the three monitoring fields has been linked to an evaluation case, which triggers a defined action when the field is infringed.

Note All cases are pre-configured so that you only have to change something in exceptional cases (e.g. response times of display sizes).

Displaying evaluation cases

1. Select the following item from the SOPAS project tree:
   LMSxxx → Parameters → Evaluation cases
2. The list of the essential evaluation fields for the AOS LiDAR is displayed.

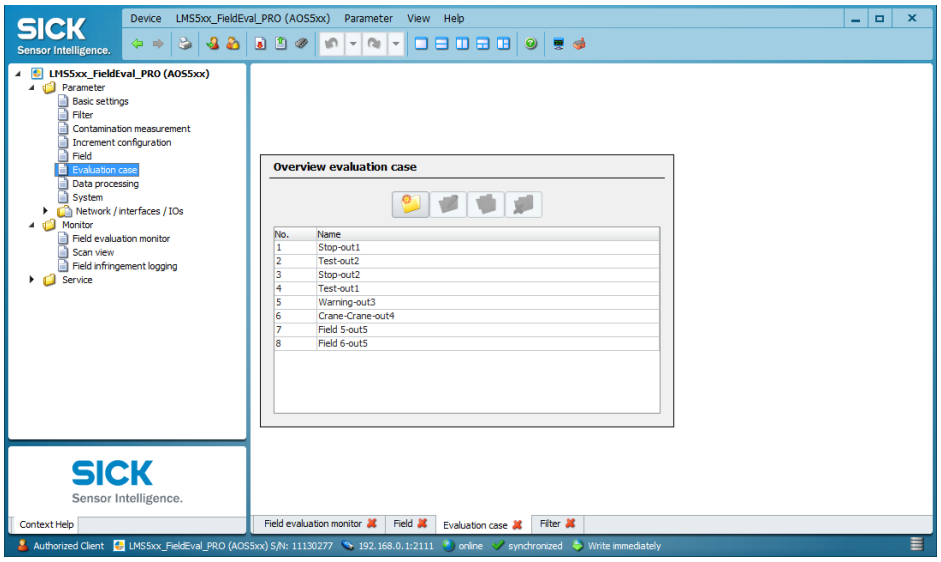

The stopping field and test field - depending on the current assignment of the switching outputs of the laser scanner - are linked with two evaluation cases each.

3. Select the corresponding evaluation case in the overview table.

4. Click the **Edit** icon. A window then opens for the configuration of the particular evaluation strategy.

The evaluation strategy

In this example, the two evaluation cases **Stop-out1** ...

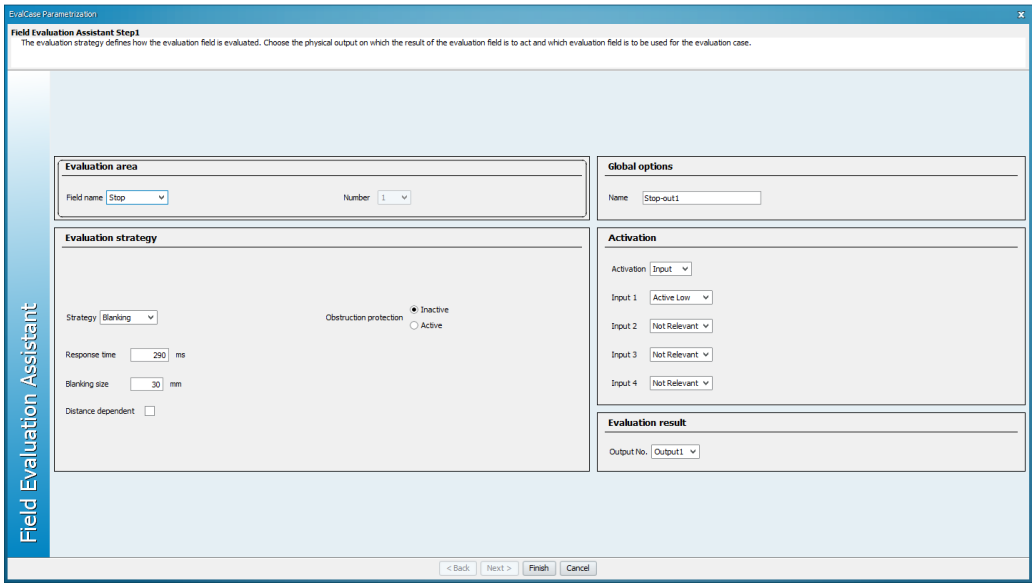

... and **Stop-out2** have been defined with different assignments to a switching output (output 1 or output 2) for the stopping field.

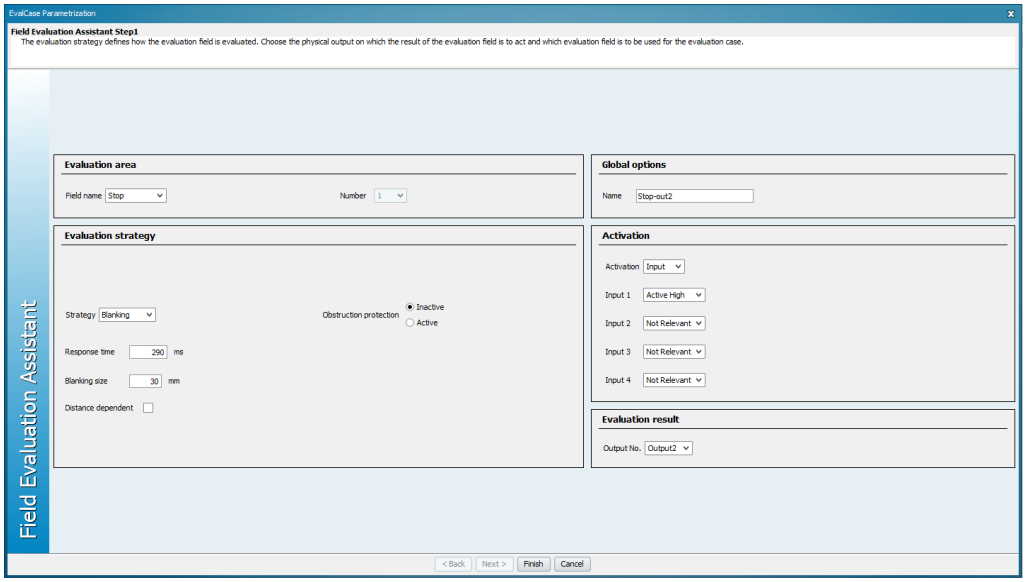

6.3.7 Testing the infringement of the monitoring fields

Make sure that the monitoring fields respond properly in the case of a corresponding field infringe.

1. Select the following item from the SOPAS project tree:
   LMSxxx → Monitor → Field evaluation monitor
2. Select **Evaluation case** from the drop down menu on the left-hand side of the toolbar in the window. Then, on the right-hand side of the window, select the evaluation case you wish to test (**Stop-out1** in the example).

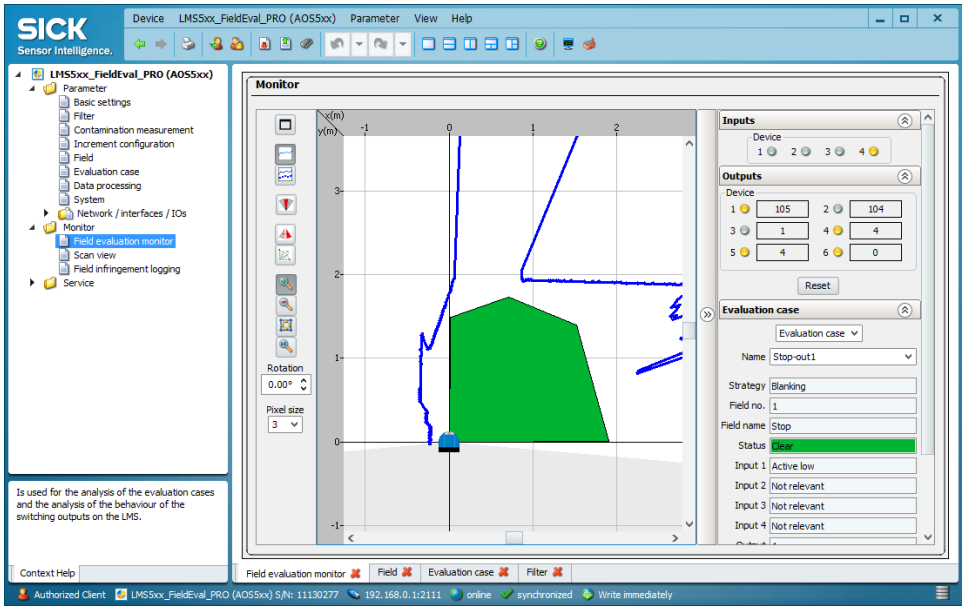

The stopping field is shown in green if it has not been infringed by an object.

3. Place an object in the stopping field and check whether the field is infringed as intended. The color of the field changes from green to yellow.
4. Select the **Test-out2** evaluation case. If the test field has been correctly positioned on the test target, the laser scanner should indicate a infringe of the field. The test field shown is thus displayed in yellow.

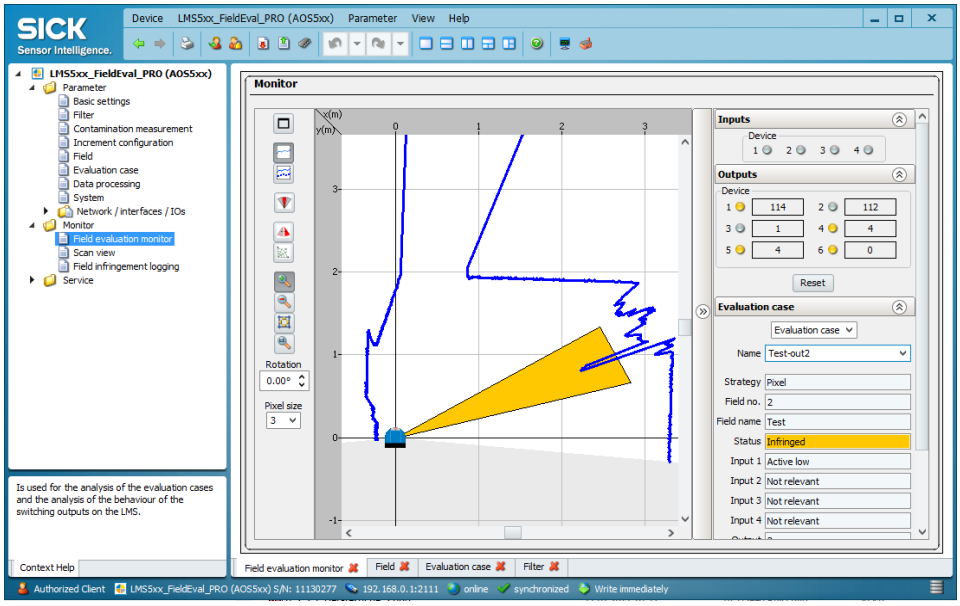

Note At this point, the fields are still static. An automatic switch of the fields from “not infringed” to “infringed” and vice versa only occurs when the laser scanner is operated by the control and receives the corresponding test signal.

Note on the response times

The response time of the overall AOS system is equal to the sum of the Flexi Soft response time plus the response time of the laser scanners (independent of the number of scanners connected).

T_A AOS = T_A Flexi Soft + T_A laser scanners

The Flexi Soft response time is derived from the program runtime of max. 16 ms and the discrepancy evaluation of 30 ms for the switching outputs of the laser scanners. The maximum Flexi Soft response time is therefore always 46 ms.

The laser scanner response time is configured directly.

Note Because of the availability required for applications in outdoor areas, the response time chosen for the laser scanner must not be too short (rain/snow interruption).

Be sure to keep the response time of the overall system in mind for the size of the monitoring fields!

6.3.8 Transferring and saving parameters to the device

Finally, you will transfer all modified field geometries to the laser scanner.

- Click the **Write all parameters** icon in the toolbar. The parameters adjusted in SOPAS are transferred to the device.

- To do this, click on the **Save permanently** icon in the SOPAS toolbar. The configuration is permanently saved on the laser scanner.

6.3.9 Exporting the device

Once you have successfully completed the tests, save the current parameters and settings as a **device file**. With the device file, it is possible to reuse the settings in a different project.

This allows you, e.g., when replacing a laser scanner, to load the device data directly to the replacement device.

1. Click the **Export SVD file** command in the **Device** menu.
2. Enter the file name and the storage place.

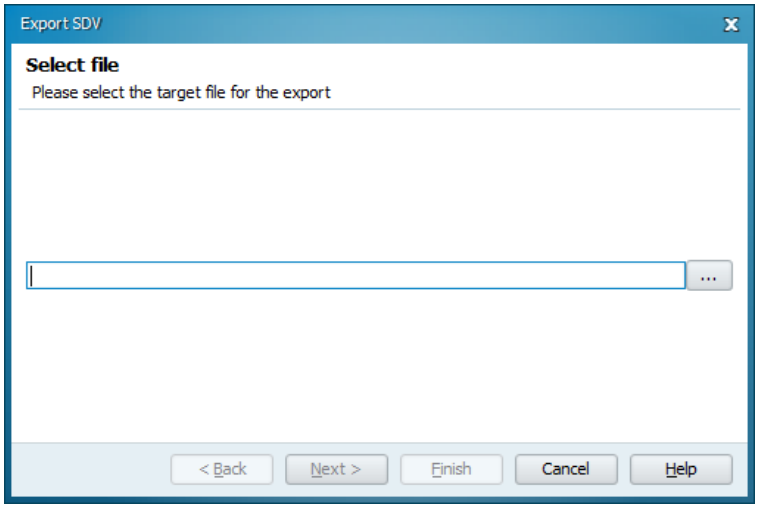

3. Click **Next**. The device file is saved.
4. Finish the export with **Complete**.

6.4 Configuring the modular control with Flexi Soft Designer

All basic functions for the overall AOS LiDAR system are available as project files on the USB stick provided. Complete files are provided for the operation of the AOS10x and AOS50x.

Configuring the AOS evaluation logic occurs via a simple file download using the supplied **Flexi Soft Designer** configuration software.

The parameters are automatically transferred by the Flexi Soft to the configuration memory (connector plug) of the modular control and ultimately verified.

Normally, no additional adjustments of the inherited settings are required.

Note These operating instructions exclusively describe the operation of the Flexi Soft within the AOS LiDAR object detection system.

For expanded operation, e.g., with gateway modules or XTIO expansion modules with evaluation logic for other peripheral devices, please refer to the separate Flexi Soft operating instructions.

6.4.1 Preparation work

6.4.1.1 Installing Flexi Soft Designer

Install the latest version of the configuration software from the SICK homepage on the configuration PC.

1. Open the www.sick.com website in the browser.
2. Enter **Flexi-Soft-Designer** in the search field and start the search.
3. Download the latest version of the software and save this in a temporary directory on the configuration PC.
4. Start the installation by double-clicking on the **SICK_FlexiSoftDesigner_*[Version]*_setup.exe** file.
5. Select the user language of the wizard.
6. Click **OK** to confirm. The Setup Wizard opens.

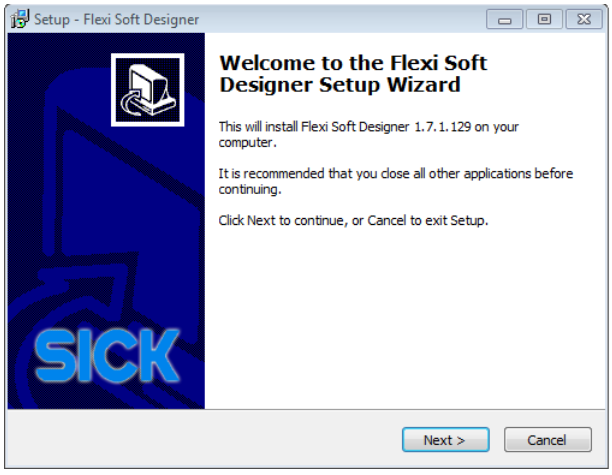

7. Follow the Setup Wizard and perform the installation. Depending on the configuration, a program group is created and an icon is placed on the desktop.

6.4.1.2 Establishing a connection with the configuration PC

The system is configured using a configuration PC that is connected to the modular control via a USB interface.

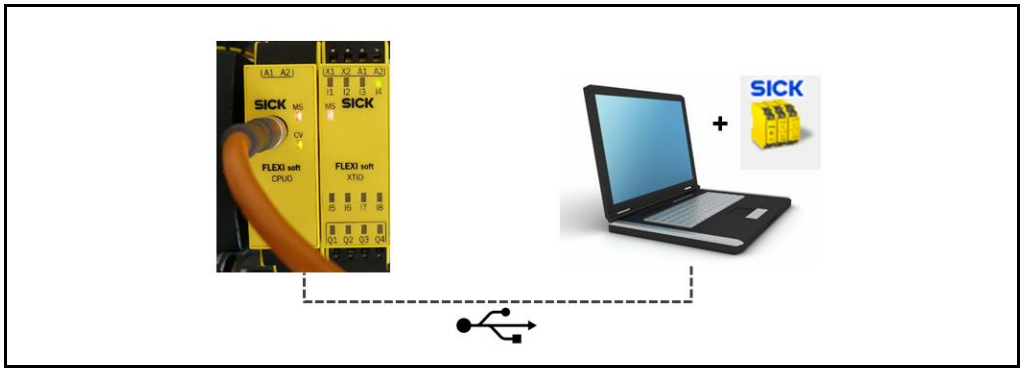

Fig. 40: Connecting the Flexi Soft and the configuration PC

- Insert the M8 male connector of the supplied configuration cable into the female connector on the central control unit (RS-232 cable with integrated USB transducer).
- Insert the male USB connector into an open female connector on the configuration PC.

Connecting USB stick containing parameters to the PC

- Insert the supplied USB stick containing the parameters into an open female connector on the configuration PC.

6.4.1.3 Starting Flexi Soft Designer

- Launch the Flexi Soft Designer by double-clicking on the program icon on the desktop. The initial screen is displayed.

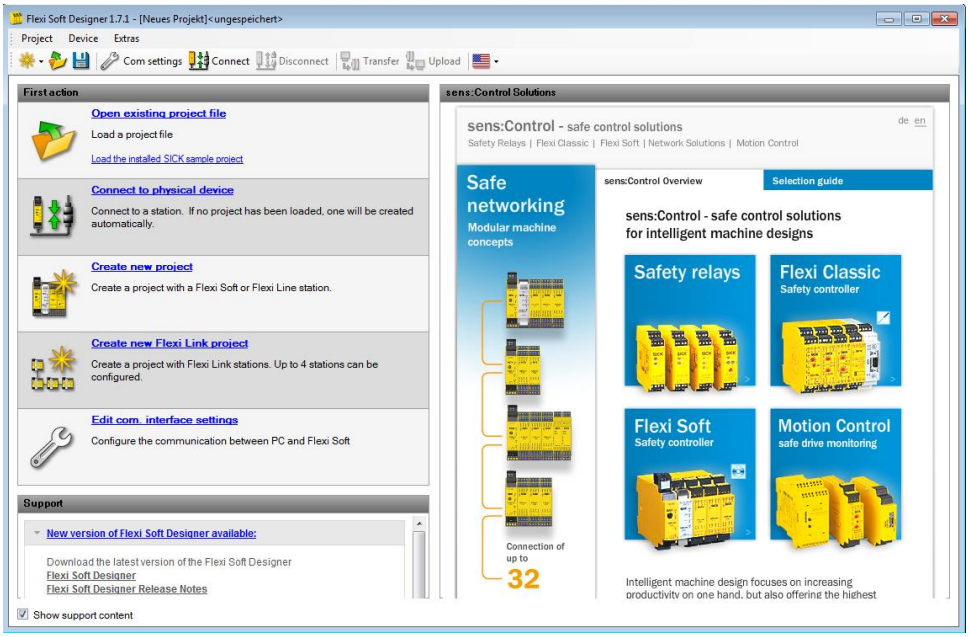

Note Use the separate **Flexi Soft-QuickStart_downloads.pdf** instructions on the USB stick for the step-by-step process.

6.4.2 Opening the project file containing the parameter set

As a first step, load the parameter set that belongs to your system configuration. This set is stored in a corresponding project file on the USB stick.

1. In the main window, click the **Open existing project file** link and select the project file that is to be imported from the stick.

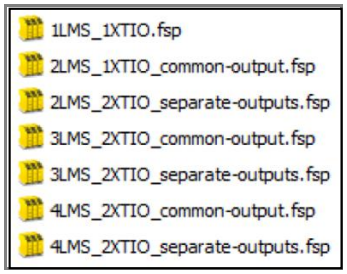

Notes

Make sure that you select the project file that matches your system configuration. The project files have descriptive names that allow you to clearly recognize the associated number of laser scanners and I/O modules.

Please note that the function of the Flexi Soft module outputs can be different depending on the configuration.

Here, the Flexi Soft does not differentiate between LMS111 and LMS511 laser scanners.

2. A progress window provides you with information on the current status. Once loaded, the hardware configuration is displayed in the Flexi Soft Designer.

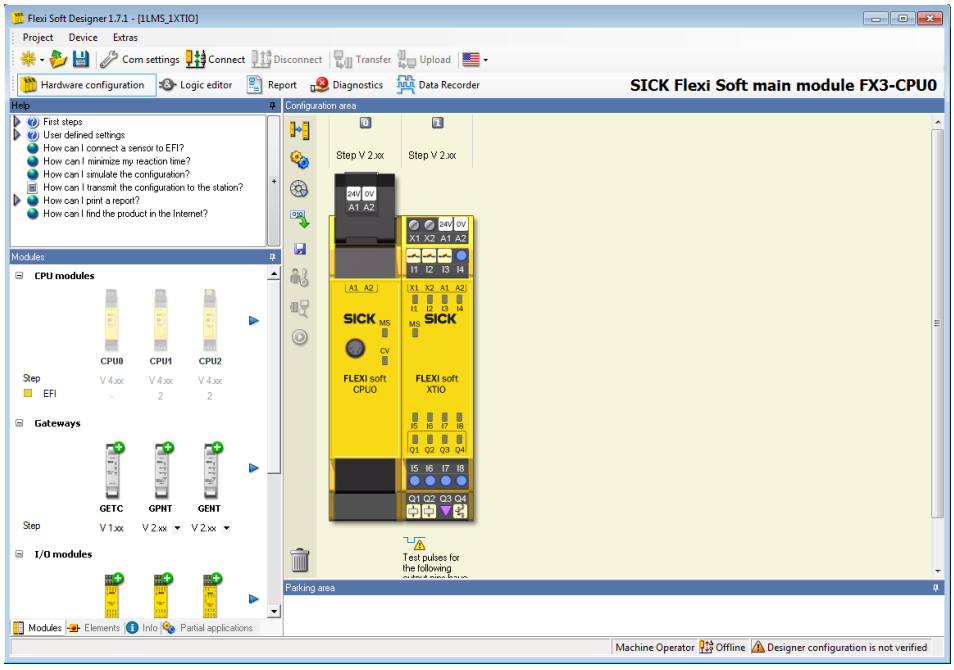

In our example, a hardware configuration was loaded that consists of the central control unit and an expansion module.

6.4.3 Transferring the parameter set to the control unit

Next, transfer the parameter sets loaded from the USB stick to the control unit via the USB interface.

Checking the connection settings

- Check your serial connection settings beforehand. Click the **Com settings** icon in the toolbar. The **Communication settings** window opens.

This window contains a display of all existing connection profiles. The currently activated profile is light green and indicated by a bold font, and the profile selected for editing is highlighted in blue.

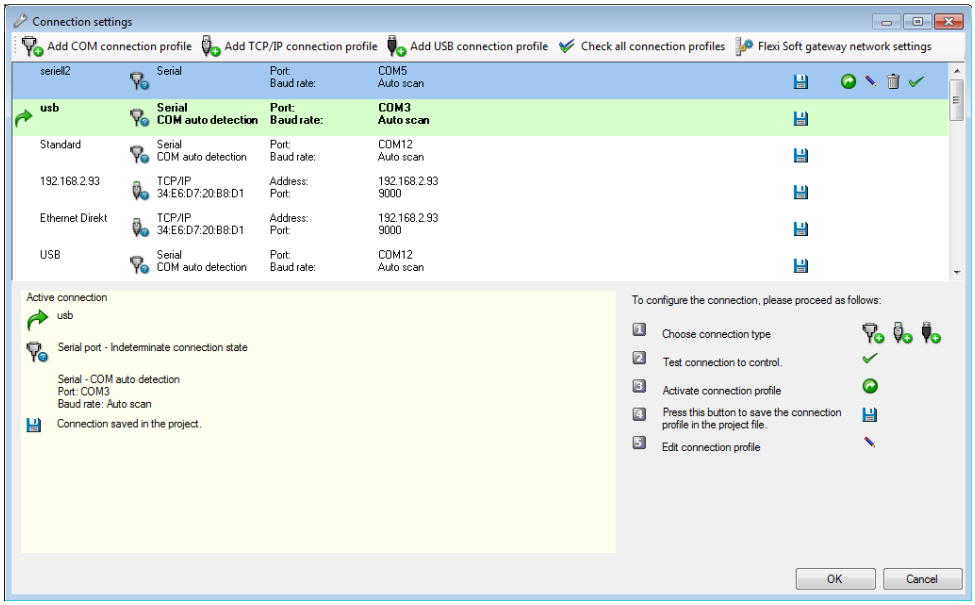

You can use the toolbar in the upper area of the window to set the respective parameters or activate the respective profile.

An overview of the current settings can be found in the bottom part of the dialog window.

- If necessary, select the required connection type by double-clicking on the corresponding icon.

Establishing a connection

1. Click the **Connect** icon in the toolbar. All online COM ports are searched and connected. A progress window provides you with information on the current connection status.
2. Once there is a USB connection to the Flexi Soft control unit, the parameters can be transferred. A window will notify you that the parameters on the control unit do not currently match the parameter sets loaded in the Flexi Soft Designer.

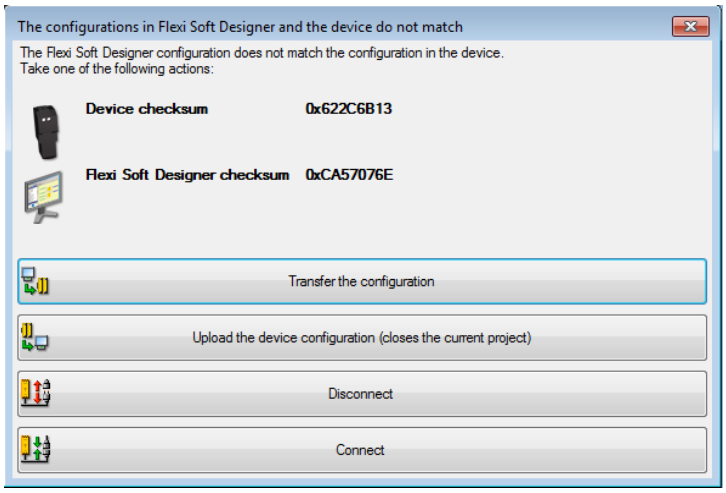

3. Click **Transfer the configuration**. The Login window opens.
4. Enter the following password (in all caps): **SICKSAFE**.

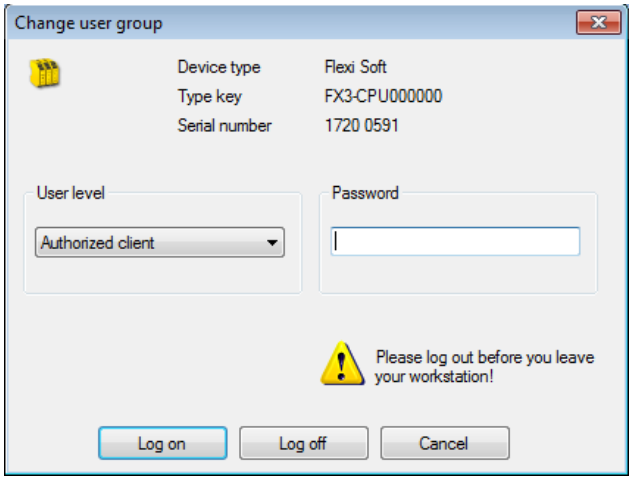

5. Click **Login** to confirm your entry. The transfer process begins. During this process, a copy of the configuration that was loaded into the Flexi Soft Designer is transferred to the control module.

Before transmission, you receive a safety prompt which you confirm with **Yes**.

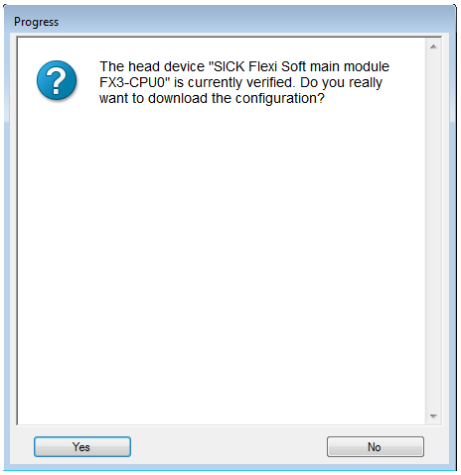

6. When the parameter sets have been successfully transferred to the control, you get a prompt asking whether you would like to start the Flexi Soft main module.

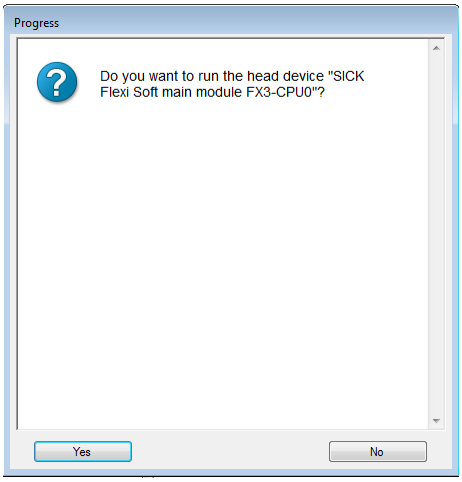

7. We recommending checking whether the configuration was correctly transferred before starting. You can then start the transferred configuration after verification.

   So first click on **No**.

You can see from the status bar that the transferred device configuration has not been verified yet. Verification means the following: It must be ensured that the parameters transferred to the control match the parameters loaded in the Flexi Soft Designer, i.e., that no data was lost during the transfer.

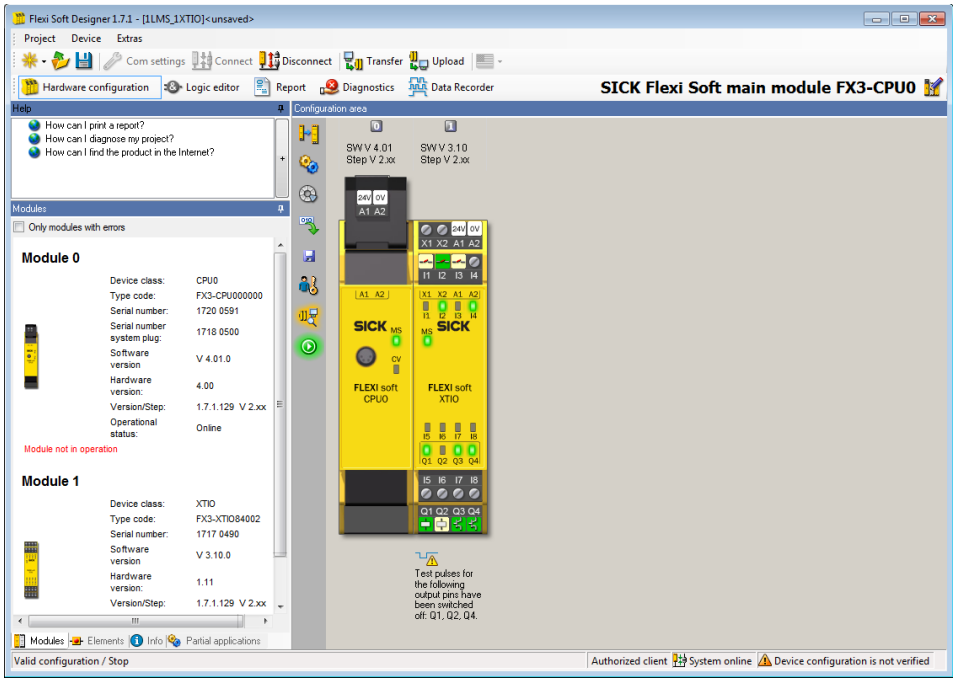

Fig. 41: View of the hardware configuration and the I/O signal states when the configuration is active

Note

- The **MS** and **CV** (configuration verified) LEDs displayed on the CPU flash alternately. A verification must still be performed.
- In the event of a loss of voltage, non-verified configurations are lost.

For this purpose, the **Receive and compare configuration** icon is activated in the vertical toolbar after the test.

6.4.4 Testing the configuration

It is advisable to first test the configuration before verifying it. This occurs with the help of the LEDs pictured on the control module.

Outputs Q1 / Q3

The LEDs for the two outputs **Q1** (output for the stop signal) and **Q3** (output for the warning signal) should be illuminated green if there has been no infringe of the related monitoring fields. The output signal **High** is visualized by a green symbol in the bottom area.

If the corresponding monitoring field is infringed, a signal change from **High** to **Low** occurs. The LED goes out, and the icon changes from green to white.

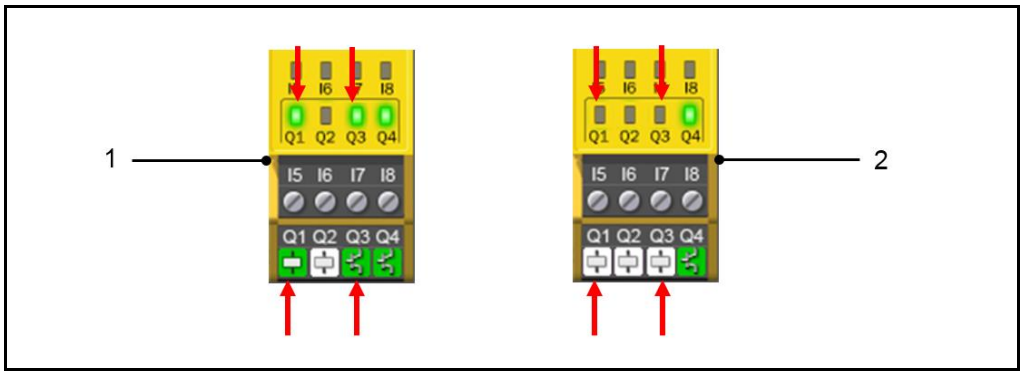

1. Customer switching outputs in the case of no infringe

Input / Output	LED	Icon
Q1	On (High signal) = no stop signal to upper-level control	Green
Q3	On (High signal) = no warning signal to upper-level control	Green

2. Customer switching outputs with field infringe

Input / Output	LED	Icon
Q1	Off (Low signal) = stop signal to upper-level control	White
Q3	Off (Low signal) = warning signal to upper-level control	White

Note When multiple laser scanners and I/O modules are used, the warning signals are always combined on output **Q3**.

Inputs I1 / I2 and output Q4

The LEDs for the two inputs **I1** (input for the stopping field/test field) and **I2** (input for the test field/stopping field) should flash alternately depending on the test command at **Q4** (switch of laser scanner outputs by test command).

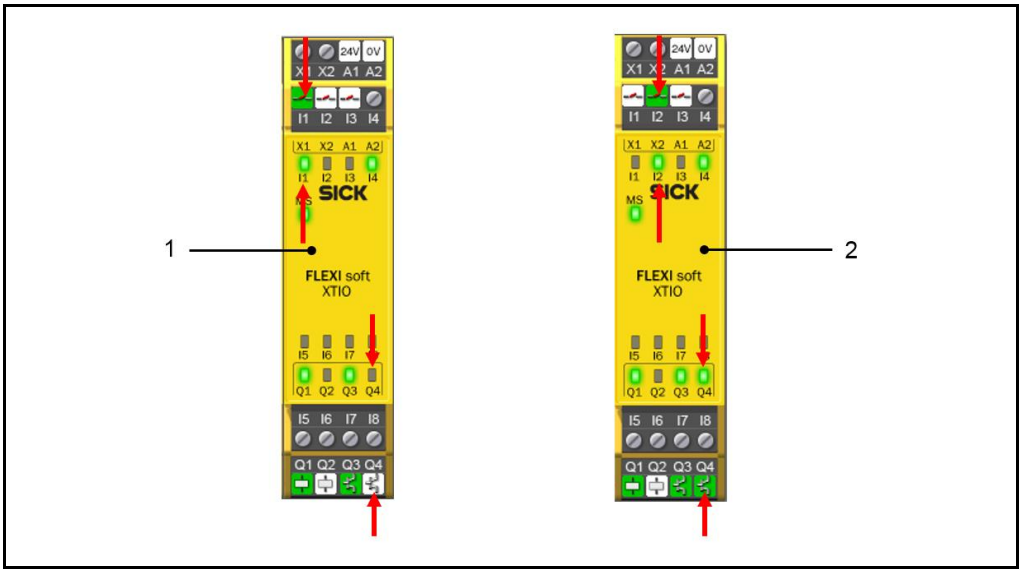

Fig. 42: Signal states on the inputs (LMS outputs) and on the outputs with and without test command

1. Response before the test command

Input / Output	LED	Icon
Q4 (2)	Off (= Low signal)	White
I1 (1)	Illuminated (= stopping field is clear)	Green
I2 (1)	Off (= test field has been infringed)	White

2. Expected response after the test command

Input / Output	LED	Icon
Q4 (4)	On (High signal)	Green
I1 (3)	Off (= test field has been infringed)	White
I2 (3)	Illuminated (= stopping field is clear)	Green

Note When multiple laser scanners are used, their stopping field and test field switching signals are visualized at the respective Flexi Soft inputs in the same manner. The output signal for switching the field assignments is always indicated at output **Q4** (see the notes on the terminal assignments in chapter *5.2.4 Connecting additional LMS511 laser scanners to Flexi Soft*).

6.4.5 Verifying and saving the configuration

If the LED cycle conforms to the above description, the configuration can be verified and permanently saved on the device.

1. Click the **Receive and compare configuration** icon in the vertical toolbar. You will receive a note informing you that the report that is to be generated is safety-related and must be read.
2. Acknowledge the note by clicking **OK**. The results of the parameter comparison are output in the **Load and compare** window.

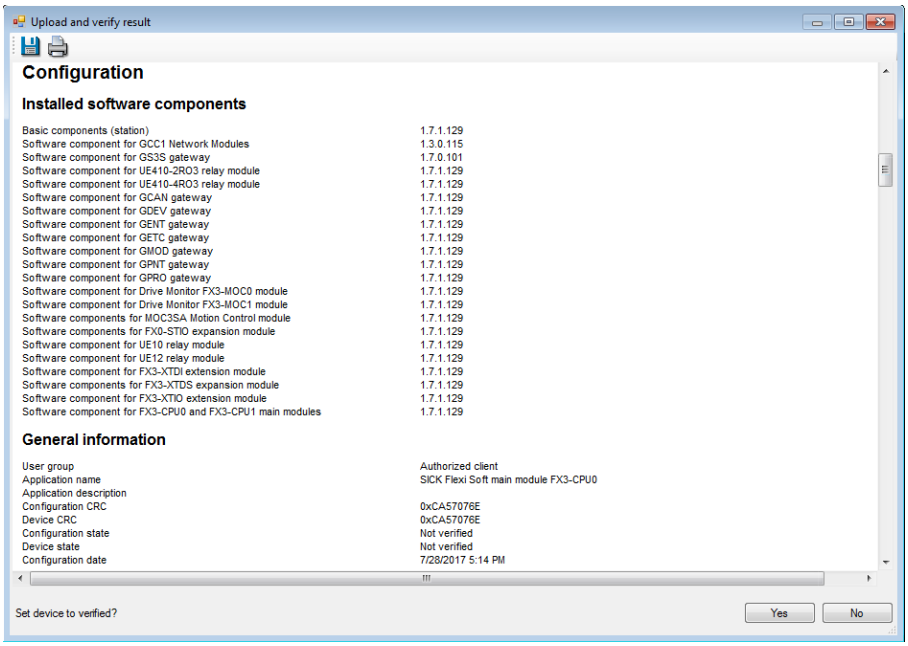

3. Read through the report and approve the device as verified. The configuration is thereby permanently saved on the device.

   You will receive a note informing you that the device can now start.

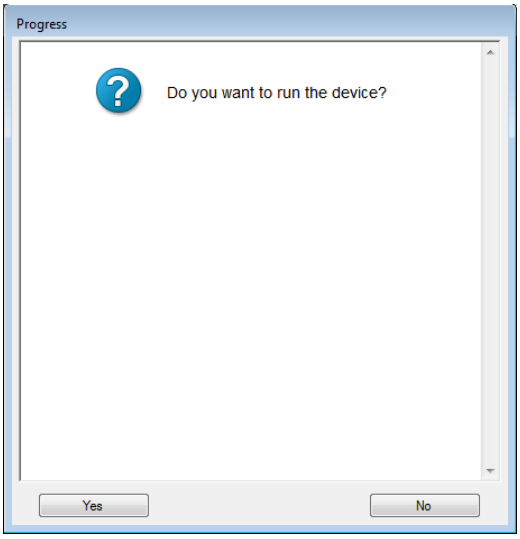

4. Press **Yes** to confirm this note.

Note The report can be saved by clicking the disk icon.

Result

Once the configuration has been verified and permanently saved, the **CV** LED is continuously illuminated yellow. The LEDs of the expansion module indicate the signal status of the inputs and outputs.

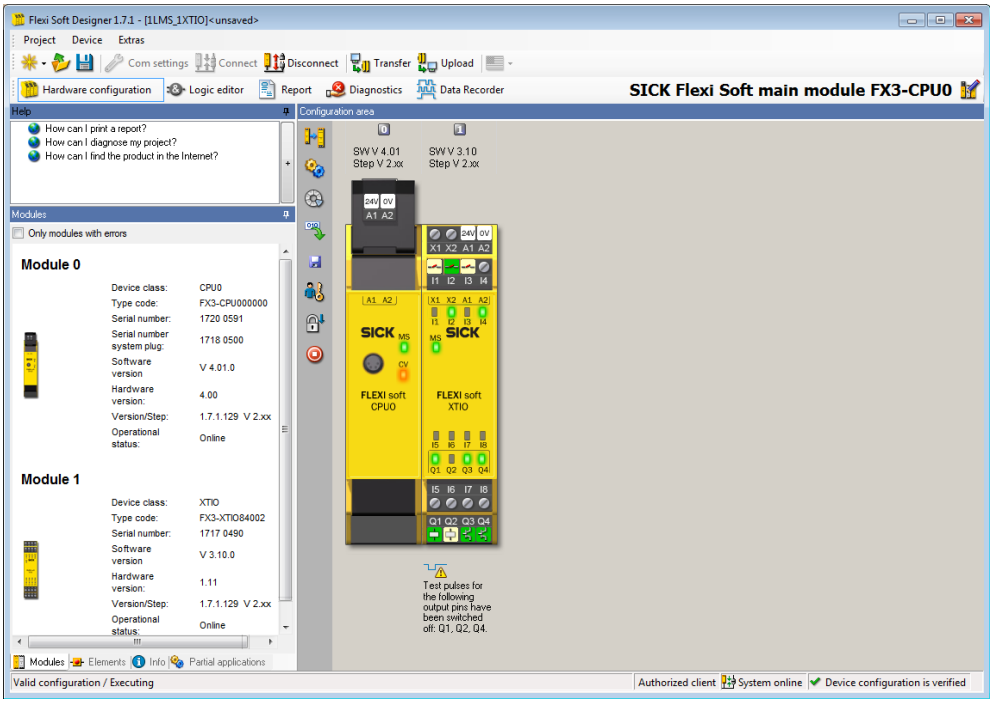

- Check the diagnostics LEDs on the devices. At this stage of commissioning, they should match the icons in the Flexi Soft Designer.

You can manually start and stop the application using the two recorder icons pictured here.

6.4.6 Preventing the configuration from being overwritten

- Finally, click the **Lock device configuration** icon in the vertical toolbar to protect the configuration from accidentally being overwritten.

Once the configuration has been locked, an additional message window will appear during any subsequent transfers.

Note We recommend saving the configuration on a PC or another storage medium.

6.4.7 Final steps

- When you have completed all configuration steps, disconnect power to the AOS LiDAR and all connected laser scanners.
- Then, switch the power supply back on again.

The system should automatically start up again.

6.5 Check the stopping and warning response of the application

Once the configuration has been verified and permanently saved, the AOS LiDAR starts with the loaded configuration after performing the power-up cycle.

Test the correct stopping and warning behavior of the application in regular cycles, but always do so during each commissioning of the machine.

Checking object detection

- Check the monitoring fields along their outer edges for proper detection. To do so, walk the edges yourself, or check the functionality using tools suitable for your application.

The system should trigger a response accordingly for every field infringe.

Checking the internal self-test

- Check the internal self-test of the system. To do this, remove the external test target.

Without a test target, the system should switch to the stop state after a maximum of 4 sec.

Ensuring proper functioning within the overall system

- Whenever system commissioning occurs, check for the required functionality of the AOS LiDAR within the overall system, as well as the interfaces necessary for trouble-free operation.

If a restart interlock is available in the overall system, it must be checked for proper functioning within the overall system during each commissioning.

- To do this, infringe the field. This should result in an immediate system stop.
- The stoppage must only be reset using the acknowledge button for the overall system, provided there are free monitoring fields.

Response to faults

The response of the laser scanner and the infringe of the monitoring fields can be tested on a connected PC using the SOPAS configuration software.

- If the field status of the laser scanner is not properly communicated, check the geometry and position of the monitoring fields.

- Defective switching inputs or wiring faults are detected by the system self-diagnostics.
- The proper system response (e.g., cut-off by the customer switching outputs) must be checked on the control.

7 Maintenance

7.1 Overview of maintenance tasks

The following maintenance work must be carried out at the specified time intervals:

Device	Maintenance task	Interval *	Carried out by
LMS511 laser scanner **LMS111 laser scanner**	Clean the front screen	As needed	Trained personnel
General	Visual inspection of the laser scanner for mechanical stability of the mounting brackets	4x/year	Trained personnel
	Visual inspection of the electrical cabling and wiring for damage	1x/year	Trained personnel
	Check for proper detection	1x/year	Trained personnel
* The intervals depend on the ambient conditions and degree of contamination. In addition, the intervals must be defined according to how significant they are for the customer process.			

Tab. 24: Maintenance intervals

7.2 Maintenance during operation

7.2.1 Visual inspection

Perform the following thorough checks at regular intervals:

Check plug connectors

Unscrew the plug connectors and check the male contacts for moisture and traces of corrosion.

WARNING

Plug connectors damaged by corrosion

Plug connectors that have been damaged by corrosion must be replaced straight away. Corroded plug connectors can have a major impact on the sensor' performance.

Checking cables

Regularly check the electrical installation. Check that all cable connections are securely attached.

WARNING

Loose connections or scorched cables

- Defects such as loose connections, scorched cables or cables with damaged insulation must be corrected or replaced immediately.

Brackets

- Check the sturdiness of the brackets by looking for cracks and other signs of damage.
- Check the screw connections once a year.

7.2.2 Cleaning the laser scanners

The laser scanners are largely maintenance-free.

To achieve the full optical output of the laser scanner, the front screen viewing window must be checked for contamination and cleaned accordingly. This is especially true in harsh operating environments (dust, humidity, etc.).

Cleaning the inspection window

- Use a clean, soft brush to remove dust from the inspection window.
- Then wipe the inspection window with a clean, damp cloth.

WARNING

Damage to the inspection window

The optical output is weakened by scratches and streaks on the inspection window.

- Do not use aggressive cleaning agents.
- Do not use abrasive cleaning agents.
- Avoid scratching and chafing movements on the inspection window.

Note Static charge may cause dust particles to stick to the inspection window. You can mitigate this effect by using anti-static plastic cleaner (part no. 5600006) and a SICK lens cloth (part no. 4003353).

7.3 Replacing components

Faulty or damaged components must be dismantled and replaced with new or repaired components.

HAZARD

Disconnect the power to the system

- Make sure the power supply for the entire system is disconnected throughout the entire time that you are carrying out maintenance and repair work.

HAZARD

Risk of injury due to electrical current

Only a qualified electrician or trained person working under the guidance and supervision of a qualified electrician is permitted to work on electrical systems or equipment, and they must comply with the electrical regulations.

7.3.1 Replacing a laser scanner

As all external cable connections terminate in the system plug or the plug connectors, there is no need to repeat the electrical installation when the device is replaced. The replacement device can simply be connected.

The replacement device is configured by importing the parameter set of the earlier device. This was saved as the *.sdv file on the configuration PC (please see chapter *6.3.4.3 Saving device parameters*).

NOTE

Claims under the warranty rendered void

Some of the housing screws on the devices are sealed.

Any claims against SICK AG under the warranty will be rendered void if the seals are damaged or if the device is opened.

The housing must only be opened by authorized SICK service personnel.

1. Loosen the M12 round connectors on the laser scanner and remove the cables from the laser scanner.
2. Dismantle the defective laser scanner from the mounting.
3. Mount the replacement device.
4. Connect the cables to the new laser scanner and screw the plug connectors together.
5. Load the saved configuration from the previous device using the SOPAS configuration software.
6. To do this, establish a connection to a new device.
7. Import the device data from the project file by selecting **Project → Import device**.
8. Select the project file and start the import process. The new laser scanner is displayed in the project tree.

7.3.2 Replacing Flexi Soft control modules

All parameters of the Flexi Soft control unit are saved on the connector plug of the main module. This allows the main module and expansion modules to be easily replaced.

Replacing the main module

1. Disconnect the main module and expansion module plug connectors. Slide each of the modules apart in the direction of the arrow until the side-mounted plug connector is disconnected.

2. Remove the connector plug containing the saved system configuration from the main module. It also contains the power supply connection.

Fig. 43: Removing the connector plug from the Flexi Soft main module

3. Press the module down at the rear and remove it from the mounting rail in the direction of the arrow while keeping it pressed down.
4. Mount the replacement device on the mounting rail.
5. Reinsert the connector plug, which should be connected to the power supply.
6. Connect the main module to the expansion module via the side-mounted plug connector (rear wall bus).
7. Switch the power supply back on. Check whether the LEDs are correctly illuminated after the system has started up. The **CV** LED is a steady yellow if the verified configuration was loaded.

Replacing the I/O expansion module

1. Remove the pluggable terminal blocks (along with the wiring) and the end pieces.

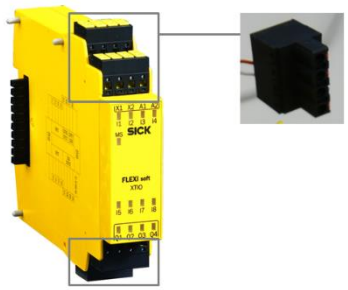

Fig. 44: Removing the terminal blocks from the I/O expansion module

2. Disconnect the module from the adjacent modules as described above.
3. Press the module down at the rear and remove it from the mounting rail in the direction of the arrow while keeping it pressed down.
4. Mount the replacement module on the mounting rail.
5. Connect the main module to the expansion module via the side-mounted plug connector.
6. Reconnect the terminal blocks and the wiring.
7. Switch the power supply back on. Check whether the LEDs of the switching inputs and outputs are correctly illuminated after the system has started up.

8 Fault diagnosis

This chapter describes how to identify and remedy AOS LiDAR errors.

8.1 Response to faults

WARNING

Danger due to malfunction!

Cease operation if the cause of the malfunction has not been clearly identified.

- Immediately stop system operation if you cannot clearly identify the fault and if you cannot safely remedy the problem.

8.2 SICK Support

If you cannot remedy the error with the help of the information provided in this chapter, please contact your SICK subsidiary.

8.3 Component fault indicators

This section explains what the LED fault indicators of the individual devices mean and how to respond to them.

8.3.1 Fault indicator on the LMS511 / LMS111 laser scanners

You can discern the following information from the LEDs:

Display	Possible cause	Remedy
OK and STOP off	Supply voltage missing or too low	▶ Check the power supply and switch it on if necessary.
lights up	Front screen slightly contaminated (warning)	▶ Clean the front screen.
flashes at 1 Hz	Front screen contaminated (error)	▶ Clean the front screen.
flashes at 4 Hz	System error	▶ Note the fault indicator of the 7-segment display or run diagnostics from the SOPAS software. ▶ Switch off the device and turn it on again, if necessary.

Tab. 25: LED display in the case of an error for the LMS511/LMS111 laser scanner

The 7-segment display provides the following information:

Display	Possible cause	Remedy
⊓⊟⊔, ⊓⊟⊔, ...	No fault	Device is in measuring mode
⊟⊔⊟	Idle mode, outputs are in the OFF state, laser is switched off.	No fault If the criteria for IDLE mode are withdrawn, the operating state is restored.
⊟⊟⊟	Motor starts	No fault
E.	Error in the laser scanner	▶ Send the laser scanner to the manufacturer for repair.
d	Temperature is too low	▶ The ambient temperature is too low for the measuring mode.

Tab. 26: 7-segment display for the LMS511/LMS111 laser scanner

8.3.2 Flexi Soft control fault indicator

Fault indicator on the main module

The LEDs on the main module provide the following information:

LED	Display	Possible cause	Remedy
MS	○	Supply voltage is out of range	Switch on supply voltage and check at terminals **A1** and **A2**.
MS	☀ **Red (1 Hz)**	Invalid configuration	Check type and version of main module and expansion modules. Adjust configuration with the Flexi Soft Designer if necessary. For more detailed diagnostic information, please use the Flexi Soft Designer.
MS	☀ **Red (2 Hz)**	Critical error in the system, presumably in **this** module. The application was stopped. All outputs are switched off.	Switch the supply voltage off and then on again. If the problem still has not been remedied after multiple repetitions, replace this module. For additional information, use the diagnostic function in the Flexi Soft Designer.
MS	● **Red**	Critical error in the system, presumably in a **different** module. The application was stopped. All outputs are switched off.	Switch the supply voltage off and then on again. If the problem still has not been remedied after multiple repetitions, replace the module showing red (2 Hz). If this does not apply, use the diagnostic function in the Flexi Soft Designer to isolate the affected module.
CV	☀ **Yellow (1 Hz)**	Unverified configuration.	The configuration must be verified by the Flexi Soft Designer.

Tab. 27: LED fault indication on the Flexi Soft main module

Fault indicator on the expansion module

The LEDs on the expansion module provide the following information:

LED	Display	Possible cause	Remedy
MS	○	Supply voltage is out of range	Switch on supply voltage and check at terminals **A1** and **A2**.
MS	● / ● **Red/Green (1 Hz)**	Remediable external error	Check cabling of the flashing inputs and outputs. If all output LEDs are flashing, check the supply voltage of the terminals **A1** and **A2**.
MS	● **Red (1 Hz)**	Invalid configuration	
MS	● **Red (2 Hz)**	Critical error in the system, presumably in **this** module. The application was stopped. All outputs are switched off.	Switch the supply voltage off and then on again. If the problem still has not been remedied after multiple repetitions, replace this module. For additional information, use the diagnostic function in the Flexi Soft Designer.
MS	● **Red**	Critical error in the system, presumably in a **different** module. The application was stopped. All outputs are switched off.	Switch the supply voltage off and then on again. If the problem still has not been remedied after multiple repetitions, replace the module showing red (2 Hz). If this does not apply, use the diagnostic function in the Flexi Soft Designer to isolate the affected module.
I/O	● **Green (1 Hz)**	(synchronously with the red MS LED)	Input/output is **deactivated** and there is a remediable error.
I/O	● **Green (1 Hz)**	(alternating with the red MS LED)	Input/output is **active** and there is a remediable error.

Tab. 28: Fault indicator on the expansion module

8.4 Diagnostics

8.4.1 Laser scanner diagnostics

A detailed check of the laser scanner is possible with the aid of a PC and the SOPAS configuration software.

To see the system status, the SOPAS configuration software must be connected online to the laser scanner (see also chapter *6.3 Configuring the laser scanner using SOPAS*).

▶ Select the following item from the SOPAS project tree:
LMSxxx → Service → System status.

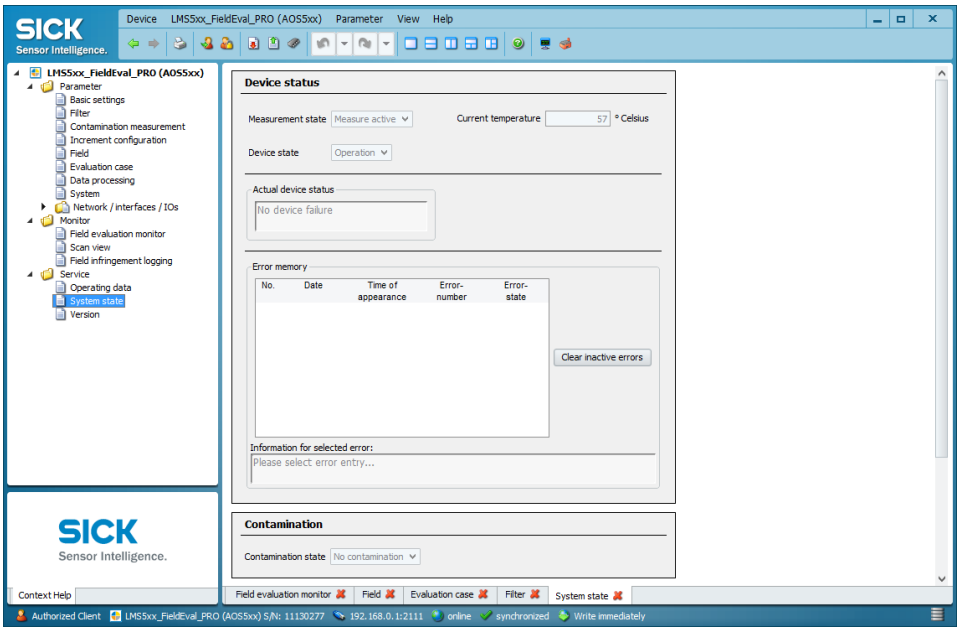

Note For a more detailed analysis of the error, refer to the operating instructions for the LMS511 or LMS111 laser scanner or contact SICK support.

8.4.2 Flexi Soft diagnostics

The most important error codes, possible causes and possible troubleshooting measures are listed in the operating instructions for the Flexi Soft control. The error messages can be displayed in the **Diagnostics** view of the Flexi Soft Designer if you have established a connection to the Flexi Soft system.

► Click the **Diagnostics** icon in the toolbar.

The diagnostic display allows you to further isolate the problem if the error situation is unclear or if there are availability issues.

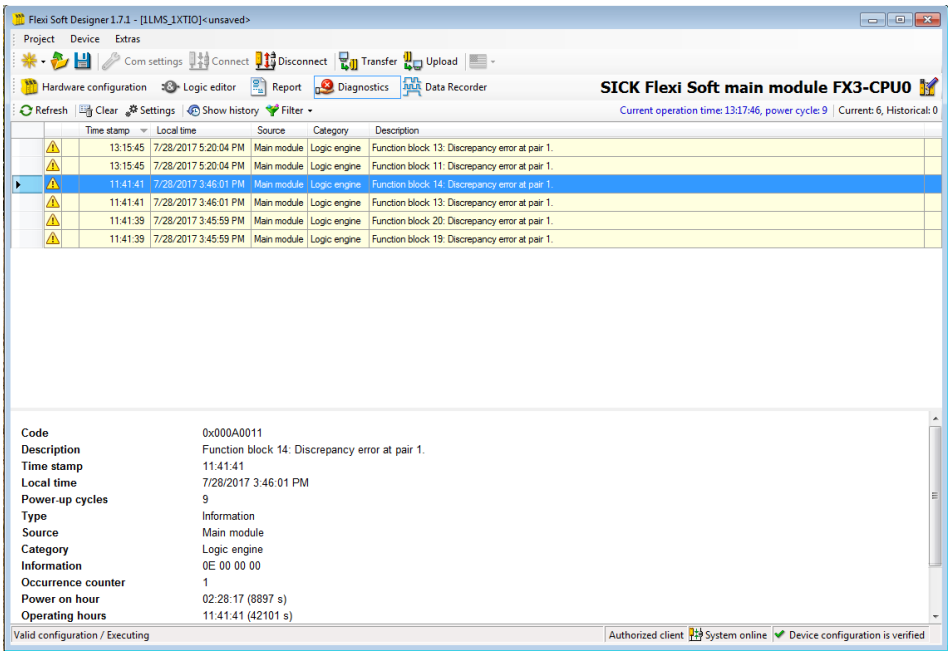

▶ Open the diagnostics report by clicking the **Report** icon.

This report contains a clear summary of all information about the particular project, including all configuration settings, the logic program and detailed wiring information.

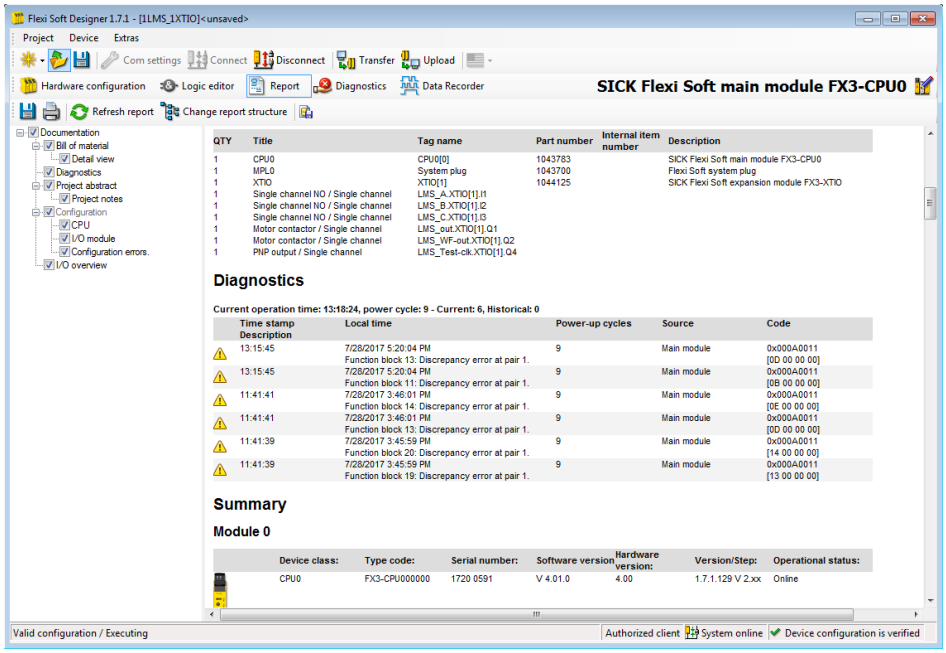

Note Detailed information for diagnosing error situations is provided in the operating instructions for the Flexi Soft control (hardware) and for the Flexi Soft Designer (software).

SICK support is also happy to provide further assistance with error analysis.

9 Technical specifications

9.1 AOS101 - AOS104 / AOS104 RTG

9.1.1 Features

Application AOS 101 - AOS 104 AOS104 RTG	 Area monitoring and collision avoidance Collision avoidance portal crane
Number of laser scanners AOS 101 (1047516) AOS 102 (1066127) AOS 103 (1066128) AOS 104 (1066129) AOS104 RTG (1064544)	 1 2 3 4 4
Scanner version	Laser scanner LMS111-10100S01
Laser class	Laser scanner: 1 (IEC 60825-1 (2007-3))
Field of view	Laser scanner: 270°
Scanning range with 10% remission	Laser scanner: 18 m
Object remission	Laser scanner: 10% ... > 1,000% (reflectors)
Ambient light immunity	Laser scanner: 40,000 lx
Heating	Laser scanner: yes

9.1.2 Performance

Response time	System: 240 ms (pre-configured value)
Number of field sets	System: per laser scanner, three fields + one test field

9.1.3 Interfaces

Configuration interface	Laser scanner: Ethernet Flexi Soft: RS-232
Switching outputs	Flexi Soft: PNP – semiconductor, short-circuit protected, cross-circuit monitored

9.1.4 Mechanics/electronics

Supply voltage	Flexi Soft: 24 V DC (16.8 V DC ... 30 V DC) Per laser scanner: 10.8 V DC ... 30 V DC
Power consumption	Flexi Soft: 5.5 W (note: via FLEX BUS+, without currents to X1 ... X8) Per laser scanner: 60 W
Output current	Flexi Soft: max. 2.0 A / max. 3.5 A per module
Connections	Flexi Soft: dual level spring terminals Laser scanner: M12 round connectors
Mounting	Flexi Soft: DIN mounting rail Laser scanner: standard kit
Weight	Per laser scanner: 1.1 kg, without configuration cables
Protection class	Flexi Soft: III (EN 61140) Laser scanner: III (EN 50178 (1997;10))
Enclosure rating	Flexi Soft: IP 20 Laser scanner: IP 67 (EN 60529, Section 14.2.7)
Electromagnetic compatibility (EMC)	Flexi Soft: EN 61000-6-2, EN 55011, EN 61131-2 (Zone B) Laser scanner: (EN 61000-6-2:2005) (EN 61000-6-4 (2007-01))
Shock resistance	Laser scanner: (EN 60068-2-27 (1993-03))
Vibration resistance	Flexi Soft: 5 Hz ... 500 (EN 61131-2) Laser scanner: (EN 60068-2-6 (1995-04))

9.1.5 Ambient data

Ambient temperature, operation	Flexi Soft: -25 °C ... 55 °C Laser scanner: –30 °C ... 50 °C
Ambient temperature, storage	Flexi Soft: -25 °C ... 70 °C Laser scanner: –30 °C ... 70 °C
Permissible relative humidity	Flexi Soft: 10% ... 95%, non-condensing

9.2 AOS501 - AOS504 / AOS502 STS

9.2.1 Features

Application AOS 501 - AOS 504 AOS502 STS AOS502 TAM	 Area monitoring and collision avoidance Collision avoidance at quay crane Monitoring of rail access routes including entry object differentiation
Number of laser scanners AOS 501 (1064409) AOS 502 (1066130) AOS 503 (1066131) AOS 504 (1066132) AOS502 STS (1064545) AOS502 TAM (1099436)	 1 2 3 4 2 2
Scanner version	Laser scanner LMS511-10100S02 or LMS511-12100S04 heavy duty
Laser class	Laser scanner: 1 (IEC 60825-1 (2007-6)), eye safe
Field of view	Laser scanner: 190°
Scanning range with 10% remission	Laser scanner: 38 m
Object remission	Laser scanner: 2% ... > 1,000% (reflectors)
Ambient light immunity	Laser scanner: 70,000 lx
Heating	Laser scanner: yes

9.2.2 Performance

Response time	System: 330 ms (pre-configured value)
Number of field sets	System: per laser scanner, two fields + one test field

9.2.3 Interfaces

Configuration interface	Laser scanner: Ethernet Flexi Soft: RS 232
Switching outputs	Flexi Soft: PNP – semiconductor, short-circuit protected, cross-circuit monitored

9.2.4 Mechanics/electronics

Supply voltage	Flexi Soft: 24 V DC (16.8 V DC ... 30 V DC) Per laser scanner: 24 V DC
Power consumption	Flexi Soft: 5.5 W (note: via FLEX BUS+, without currents to X1 ... X8) Per laser scanner: 22 W, + 55 W heater (typically)
Output current	Flexi Soft: max. 2.0 A
Connections	Flexi Soft: dual level spring terminals Laser scanner: M12 round connectors
Mounting	Flexi Soft: DIN mounting rail Laser scanner: standard kit
Weight	Per laser scanner: 3.7 kg
Protection class	Flexi Soft: III (EN 61140) Laser scanner: III (EN 60529, Section 14.2.7)
Enclosure rating	Flexi Soft: IP 20 Laser scanner: IP 67 (EN 60529, Section 14.2.7)
Electromagnetic compatibility (EMC)	Flexi Soft: EN 61000-6-2, EN 55011, EN 61131-2 (zone B) Laser scanner: (EN 61000-6-2:2005) (EN 61000-6-3 (2007-03))
Shock resistance	Laser scanner: (EN 60068-2-27 (1993-03)) (EN 60068-2-29 (1993-04))
Vibration resistance	Flexi Soft: 5 Hz ... 500 (EN 61131-2) Laser scanner: (EN 60068-2-6 (1995-04))

9.2.5 Ambient data

Ambient temperature, operation	Flexi Soft: -25 °C ... 55 °C Laser scanner: -30 °C ... 50 °C LMS511-1200S04 heavy duty: -40 °C ... +60 °C
Ambient temperature, storage	Flexi Soft: -25 °C ... 70 °C Laser scanner: -30 °C ... 70 °C LMS511-1200S04 heavy duty: -40 °C ... +70 °C
Permissible relative humidity	Flexi Soft: 10% ... 95%, non-condensing

9.3 AOS LiDAR dimensional drawings

9.3.1 Dimensional drawing of the LMS511 laser scanner

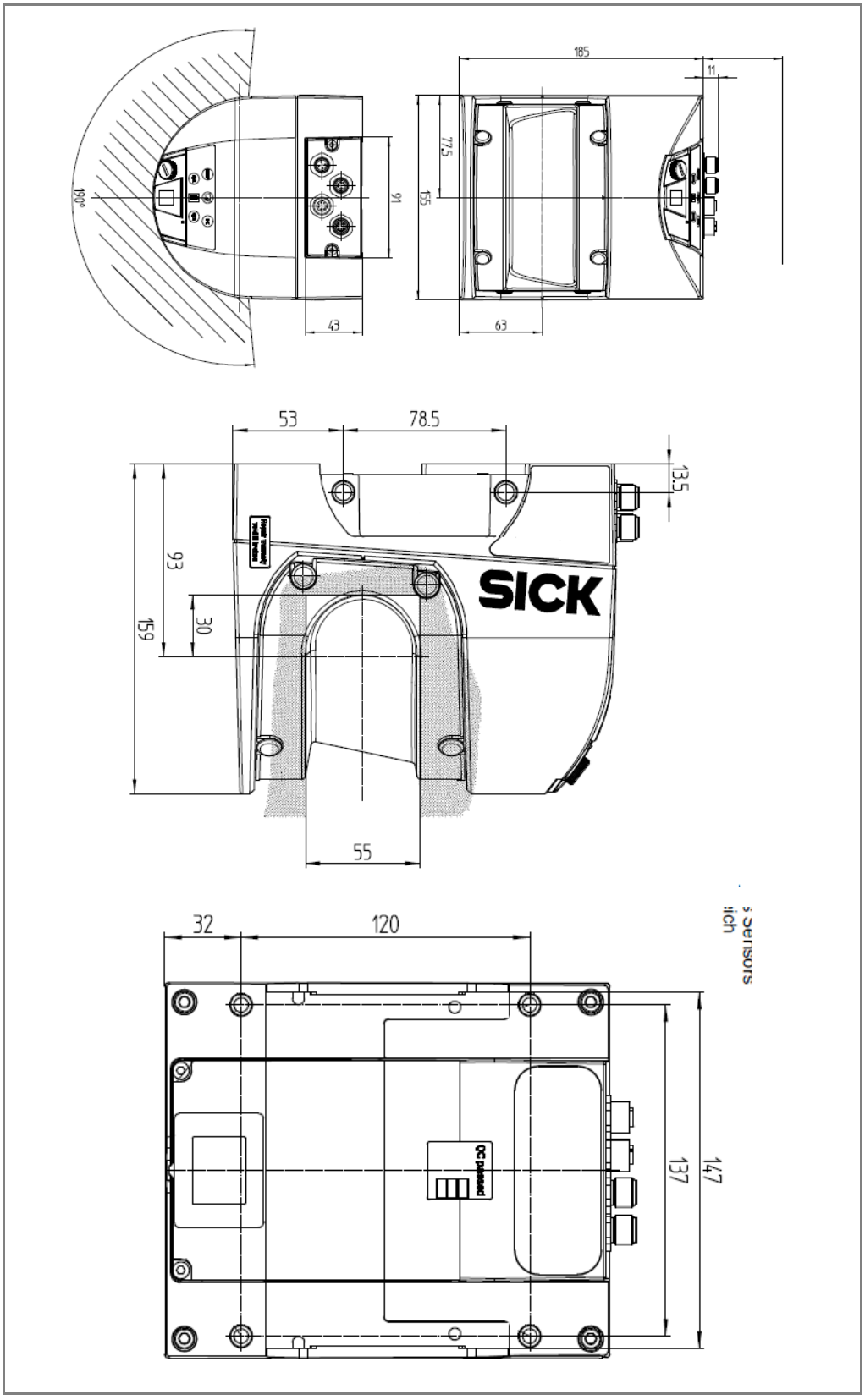

Fig. 45: Dimensional drawings of the LMS511 laser scanner

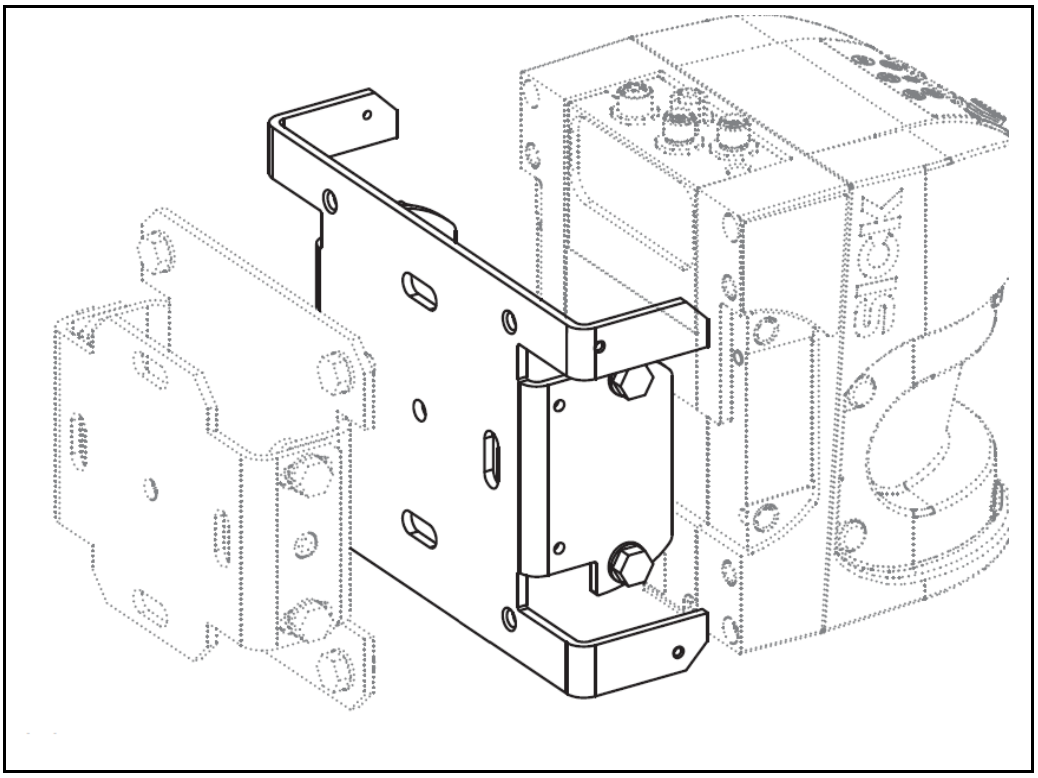

Fig. 46: Mounting kit and adapter plate (accessory set 1)

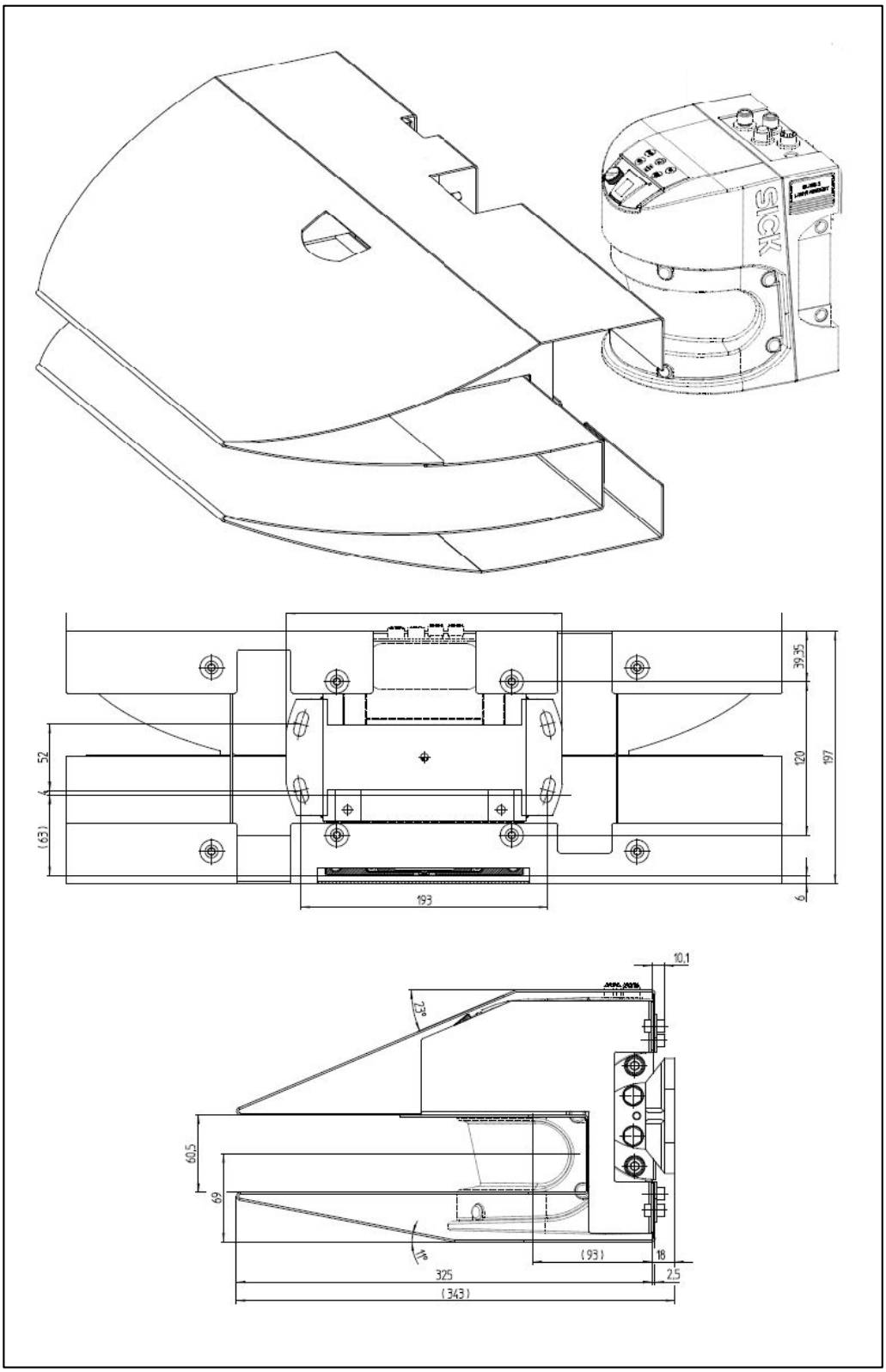

Fig. 47: Dimensional drawings of the LMS511 laser scanner with weather hood

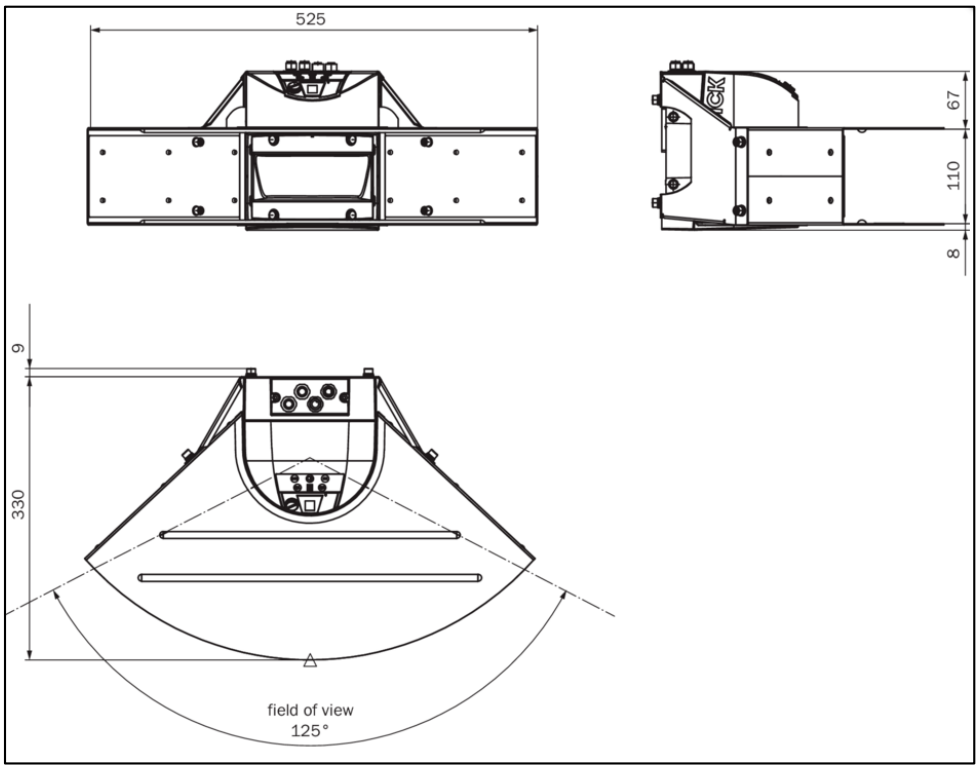

Fig. 48: Option 2 dimensional drawing weather hood 125°

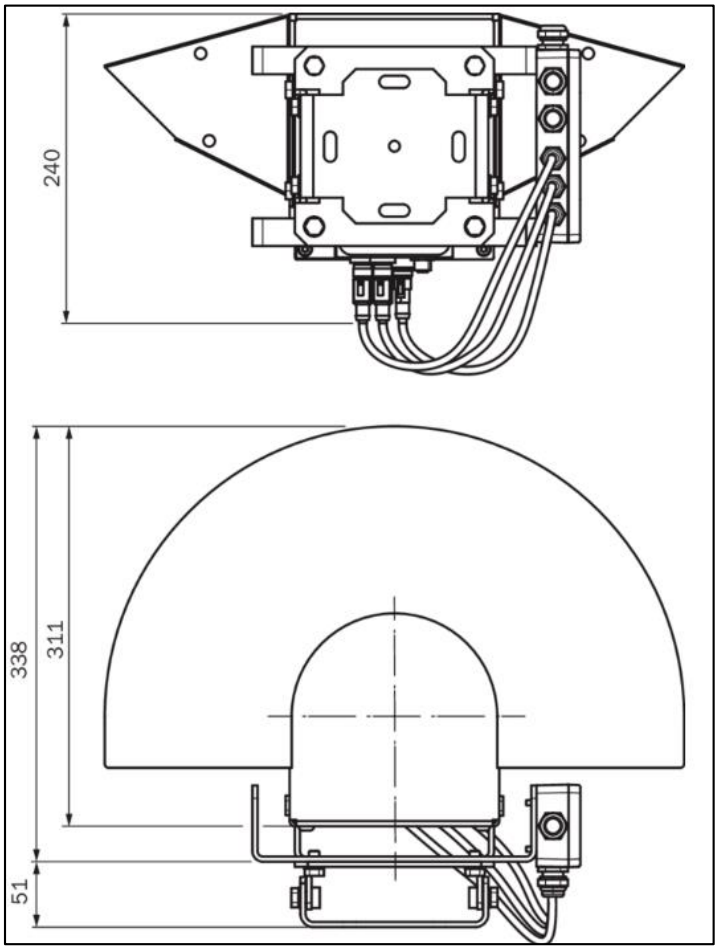

Fig. 49: Option 3 dimensional drawing weather hood 190°

9.3.2 Dimensional drawing of the LMS111 laser scanner

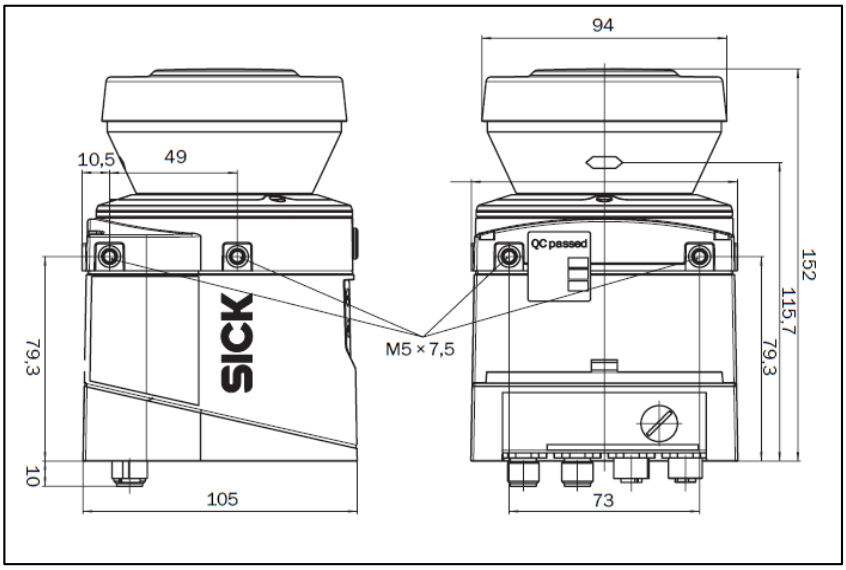

Fig. 50: Dimensional drawing of the LMS111 laser scanner

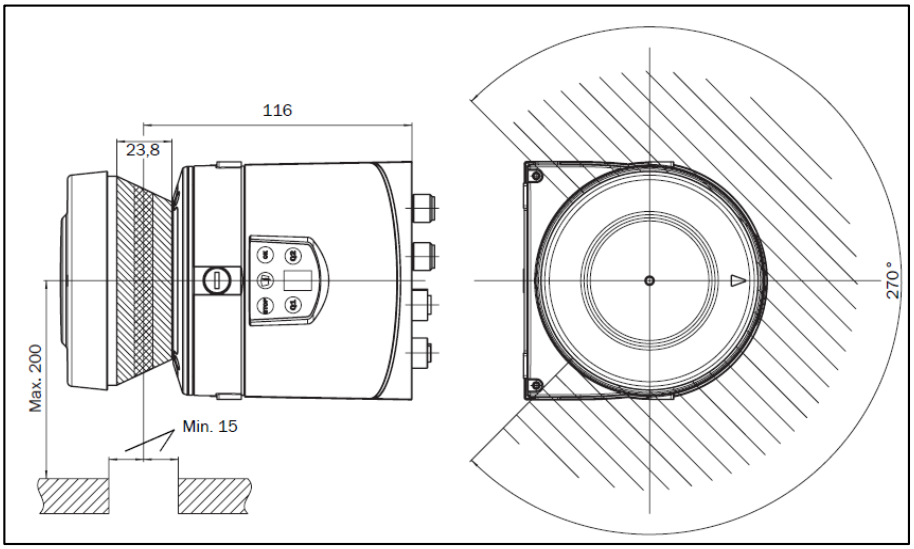

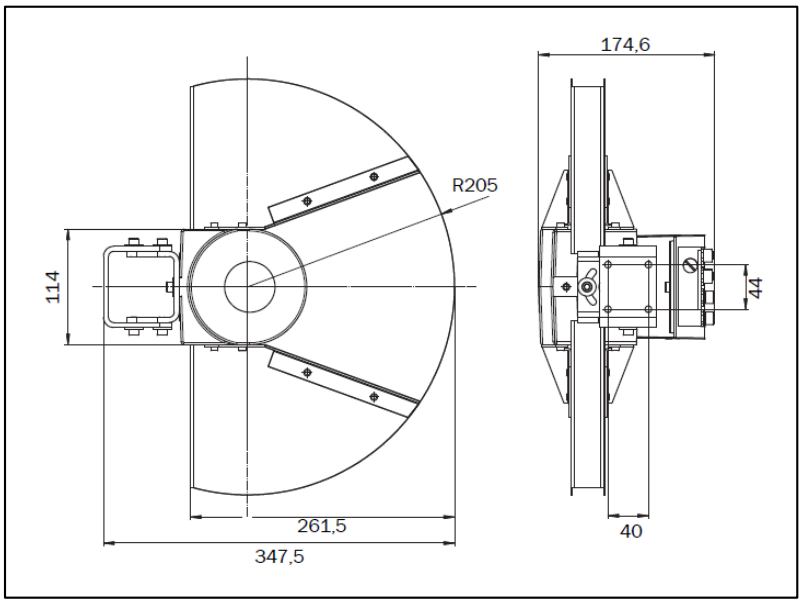

Fig. 51: Dimensional drawing of the 190° weather hood

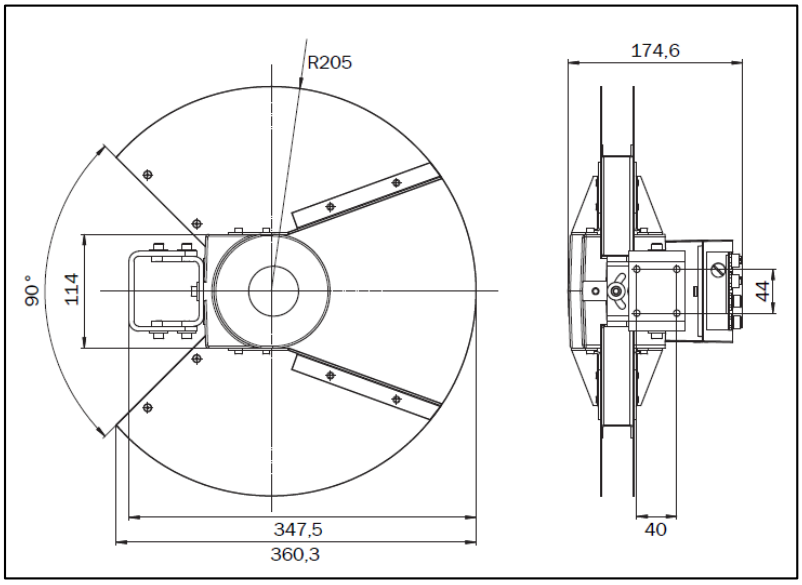

Fig. 52: Dimensional drawing of the 270° weather hood

9.3.3 Dimensioned drawing of the FX3CPU0 main module with system plug

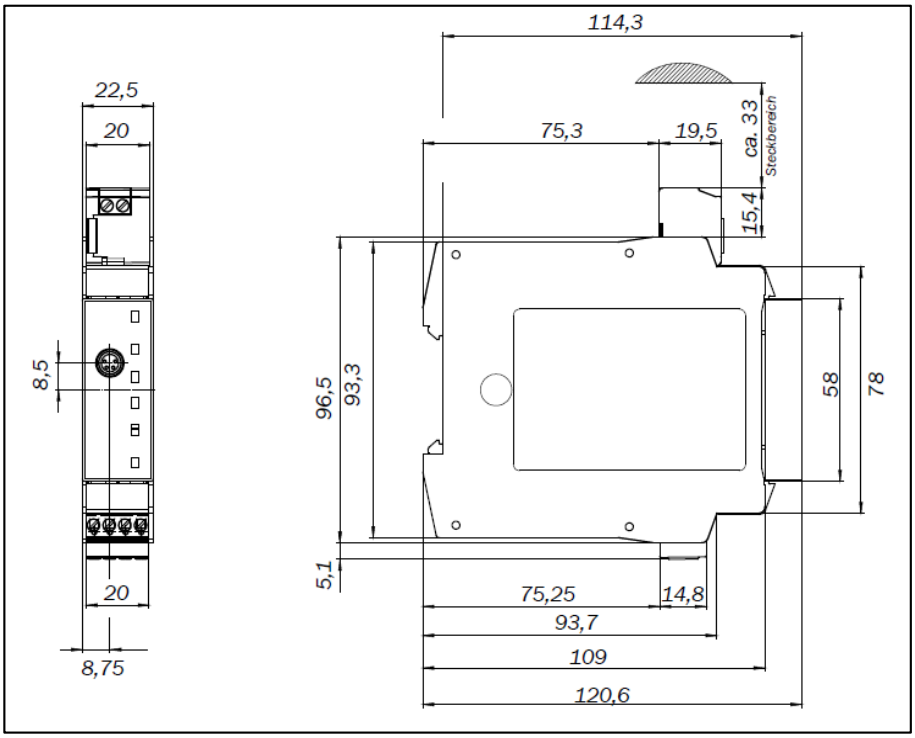

Fig. 53: Dimensional drawing of the FX3CPU0 main module with system plug

9.3.4 Dimensional drawing of the FX3-XTIO expansion module

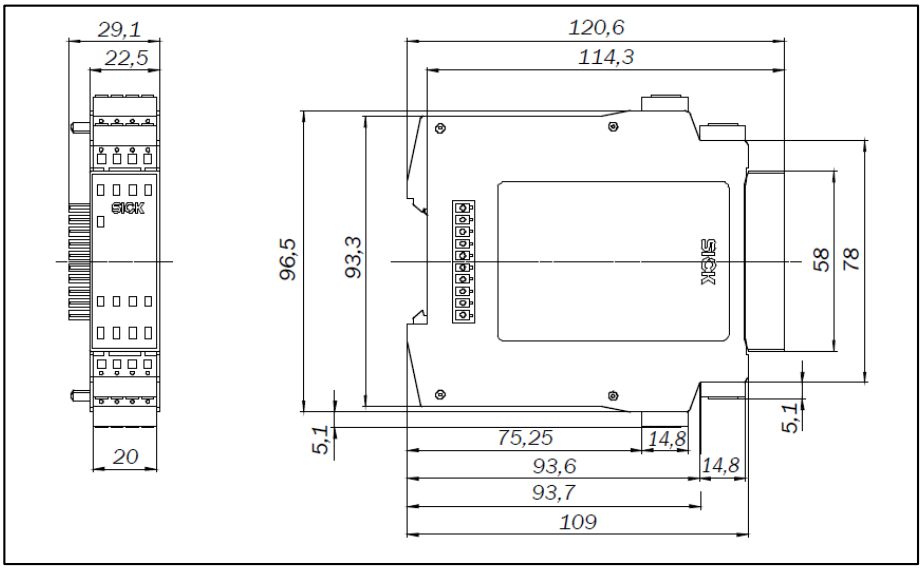

Fig. 54: 9.2.4 Dimensional drawing of the FX3-XTIO expansion module

9.4 Electrical wiring diagrams

9.4.1 Connection tables

Configuration with common stop output

Module	Connection	AOSx01	AOSx02	AOSx03	AOSx04
XTIO_1	I1	LMS1 out 1	LMS1 out 1	LMS1 out 1	LMS1 out 1
	I2	LMS1 out 2	LMS1 out 2	LMS1 out 2	LMS1 out 2
	I3	LMS1 out 3	LMS1 out 3	LMS1 out 3	LMS1 out 3
	I4				
	I5		LMS2 out 1	LMS2 out 1	LMS2 out 1
	I6		LMS2 out 2	LMS2 out 2	LMS2 out 2
	I7		LMS2 out 3	LMS2 out 3	LMS2 out 3
	I8				
	Q1	Stopping field	Stopping fields 1-2	Stopping fields 1-3	Stopping fields 1-4
	Q2				
	Q3	Warning field	Warning fields 1-2	Warning fields 1-3	Warning fields 1-4
	Q4	TEST	TEST	TEST	TEST
	X1				
	X2				
	A1	+ 24VDC	+ 24VDC	+ 24VDC	+ 24VDC
	A2	0 V	0 V	0 V	0 V
XTIO_2	I1			LMS3 out 1	LMS3 out 1
	I2			LMS3 out 2	LMS3 out 2
	I3			LMS3 out 3	LMS3 out 3
	I4				
	I5				LMS4 out 1
	I6				LMS4 out 2
	I7				LMS4 out 3
	I8				
	Q1				
	Q2				
	Q3				
	Q4			TEST	TEST
	X1				
	X2				
	A1			+ 24VDC	+ 24VDC
	A2			0 V	0 V

Tab. 29: Configuration with common stop output

Configuration with separate stop output

Module	Connection	AOSx01	AOSx02	AOSx03	AOSx04
XTIO_1	I1	LMS1 out 1	LMS1 out 1	LMS1 out 1	LMS1 out 1
	I2	LMS1 out 2	LMS1 out 2	LMS1 out 2	LMS1 out 2
	I3	LMS1 out 3	LMS1 out 3	LMS1 out 3	LMS1 out 3
	I4				
	I5		LMS2 out 1	LMS2 out 1	LMS2 out 1
	I6		LMS2 out 2	LMS2 out 2	LMS2 out 2
	I7		LMS2 out 3	LMS2 out 3	LMS2 out 3
	I8				
	Q1	Stopping field	Stopping field 1	Stopping field 1	Stopping field 1
	Q2		Stopping field 2	Stopping field 2	Stopping field 2
	Q3	Warning field	Warning fields 1-2	Warning fields 1-3	Warning fields 1-4
	Q4	TEST	TEST	TEST	TEST
	X1				
	X2				
	A1	+ 24VDC	+ 24VDC	+ 24VDC	+ 24VDC
	A2	0 V	0 V	0 V	0 V
XTIO_2	I1			LMS3 out 1	LMS3 out 1
	I2			LMS3 out 2	LMS3 out 2
	I3			LMS3 out 3	LMS3 out 3
	I4				
	I5				LMS4 out 1
	I6				LMS4 out 2
	I7				LMS4 out 3
	I8				
	Q1			Stopping field 3	Stopping field 3
	Q2				Stopping field 4
	Q3				
	Q4			TEST	TEST
	X1				
	X2				
	A1			+ 24VDC	+ 24VDC
	A2			0 V	0 V

Tab. 30: Configuration with separate stop output

9.4.2 AOS501 wiring diagram

Overview

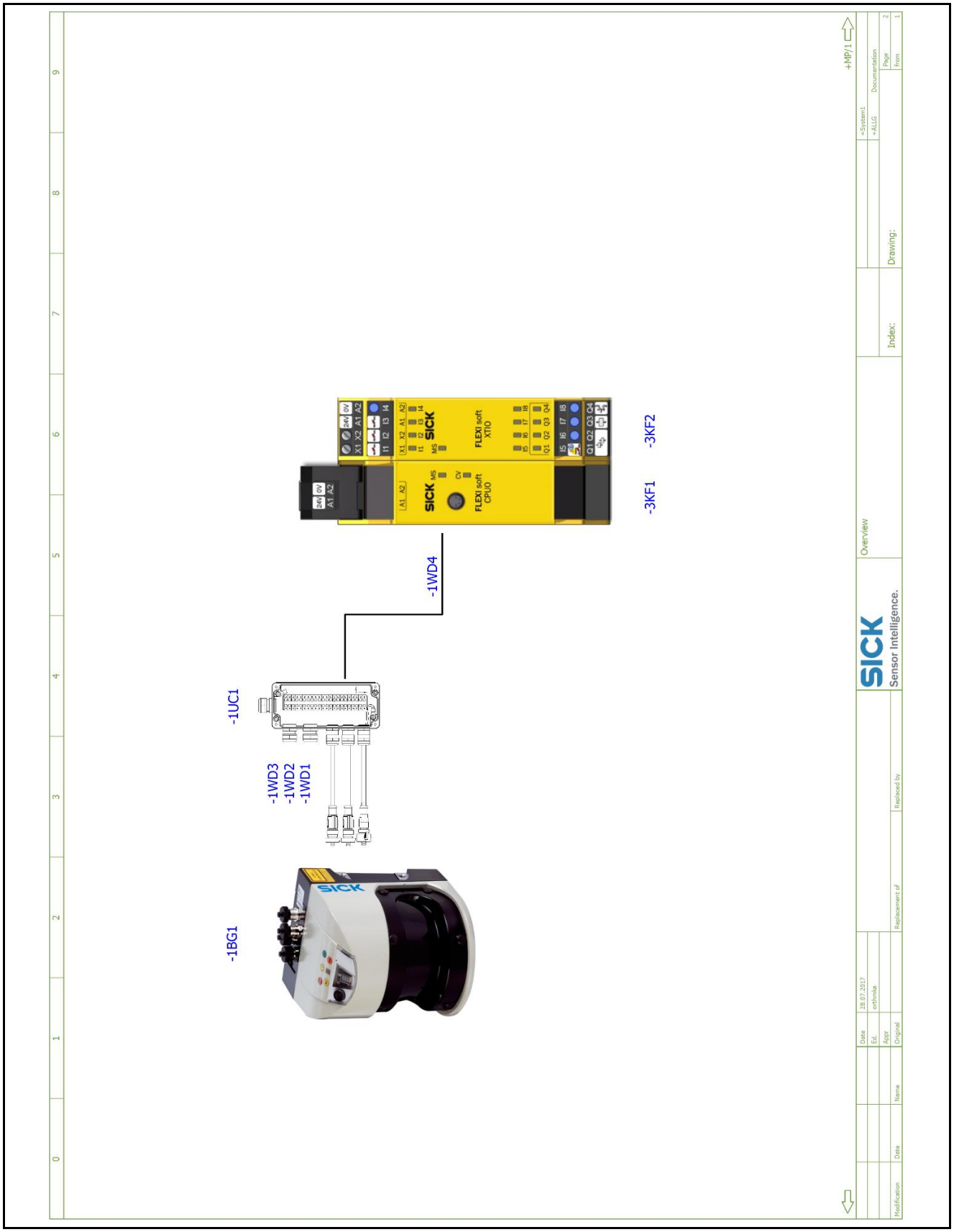

Laser scanner

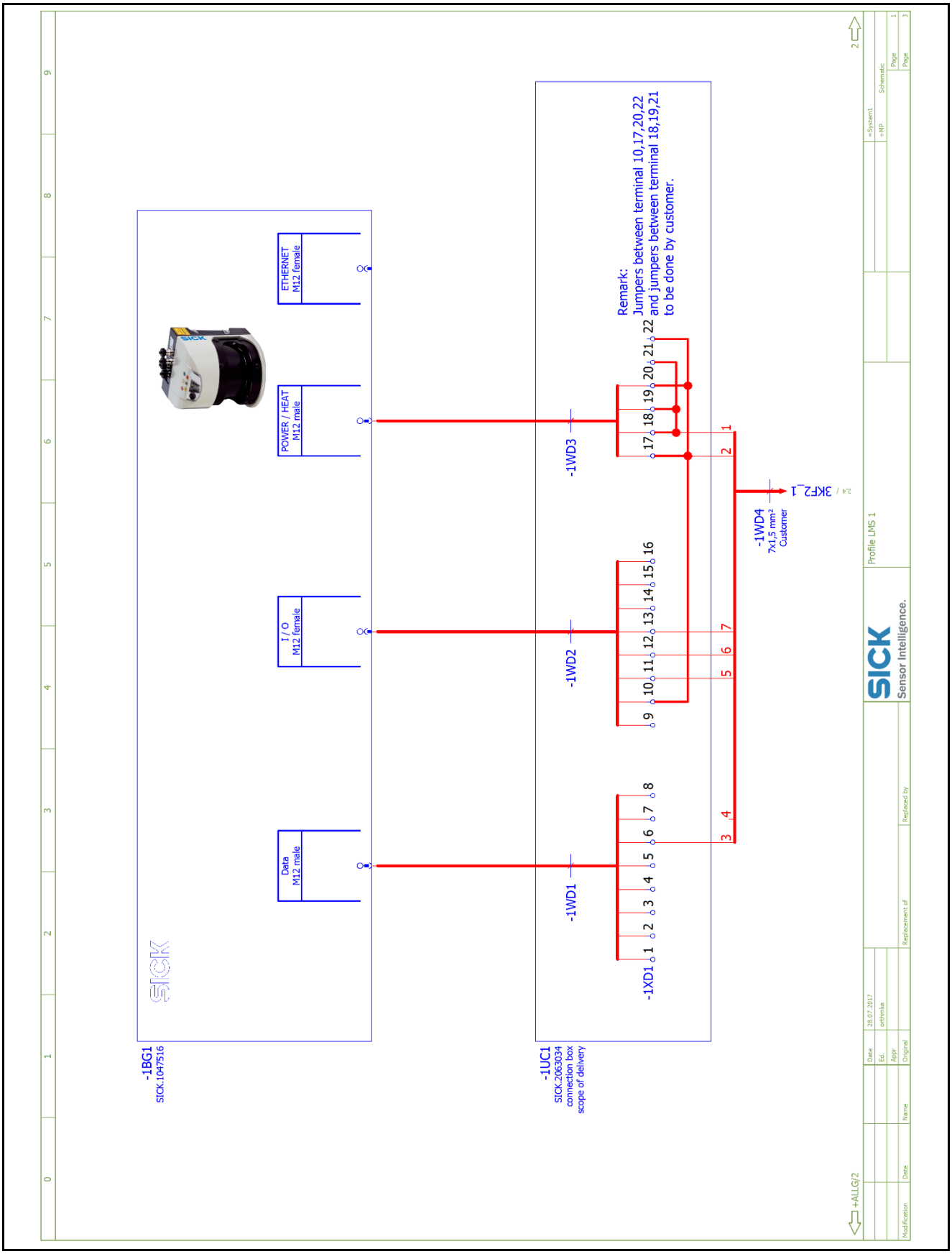

Flexi Soft

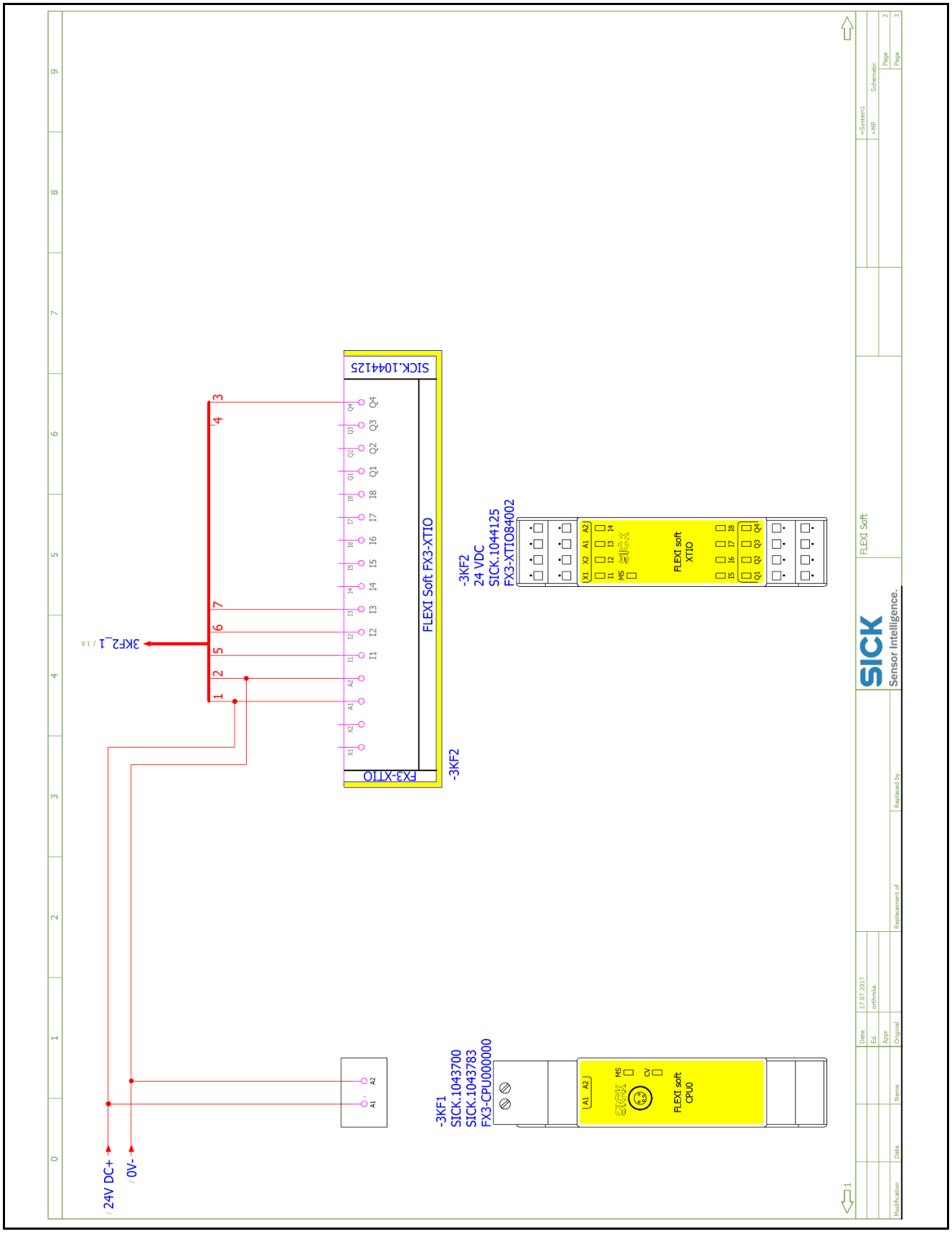
24V DC+
0V-
3KF2_1
FX3-XTIO
FLEXI Soft FX3-XTIO
SICK.1044125
-3KF2
-3KF2
24 VDC
SICK.1044125
FX3-XTIO84002
FLEXI soft
XTIO
-3KF1
SICK.1043700
SICK.1043783
FX3-CPU000000
FLEXI soft
CPU0
FLEXI Soft
SICK
Sensor Intelligence.

9.4.3 AOS502 wiring diagram

Overview

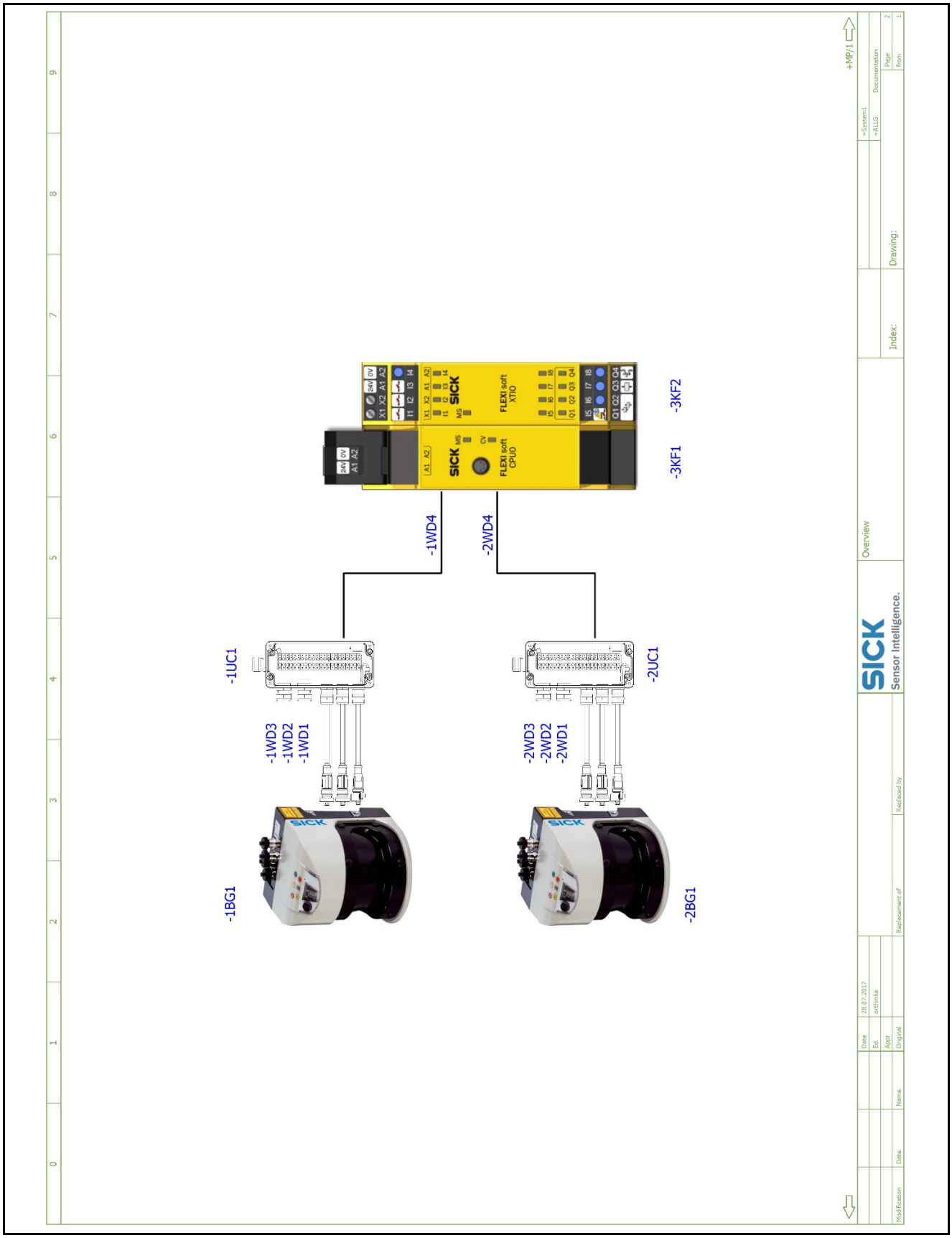

Laser scanner*

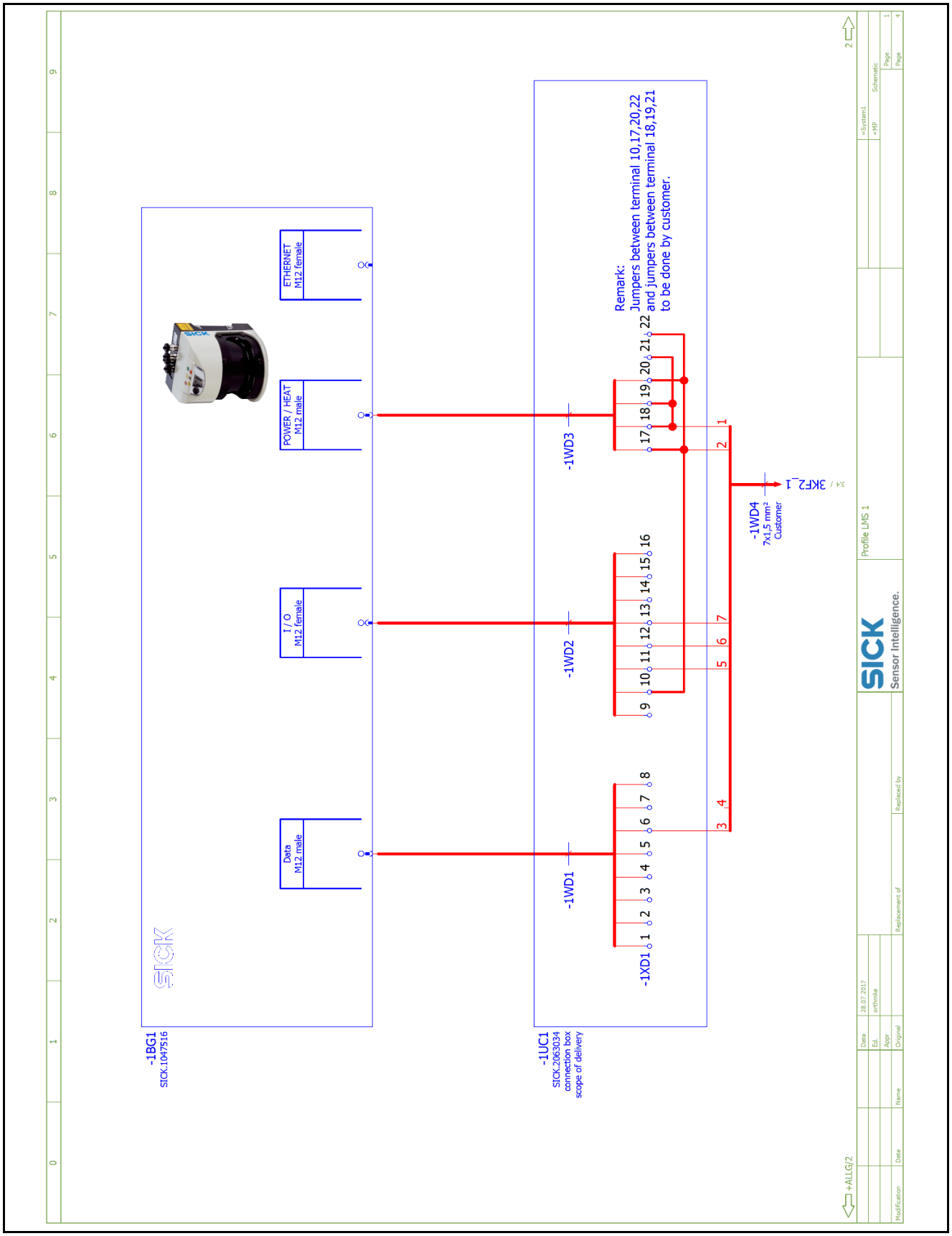

* The wiring is identical for all laser scanners.

Flexi Soft

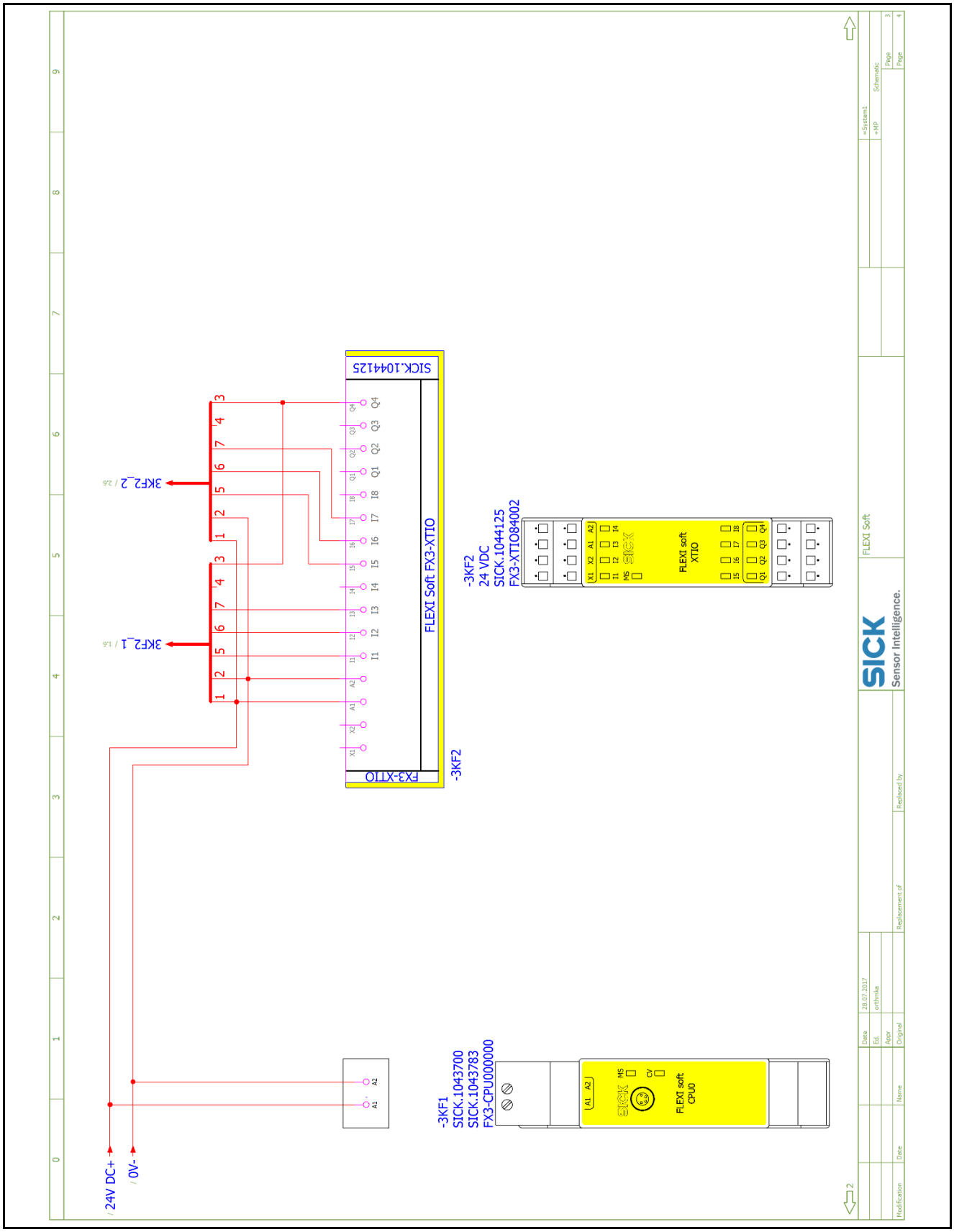
24V DC+
0V-
3KF2_1 / L6
3KF2_2 / Z6
FX3-XTIO
SICK.1044125
FLEXI Soft FX3-XTIO
-3KF2
-3KF2
24 VDC
SICK.1044125
FX3-XTIO84002
FLEXI soft
XTIO
-3KF1
SICK.1043700
SICK.1043783
FX3-CPU000000
FLEXI soft
CPU0
FLEXI Soft
SICK
Sensor Intelligence.

9.4.4 AOS503 wiring diagram

Overview

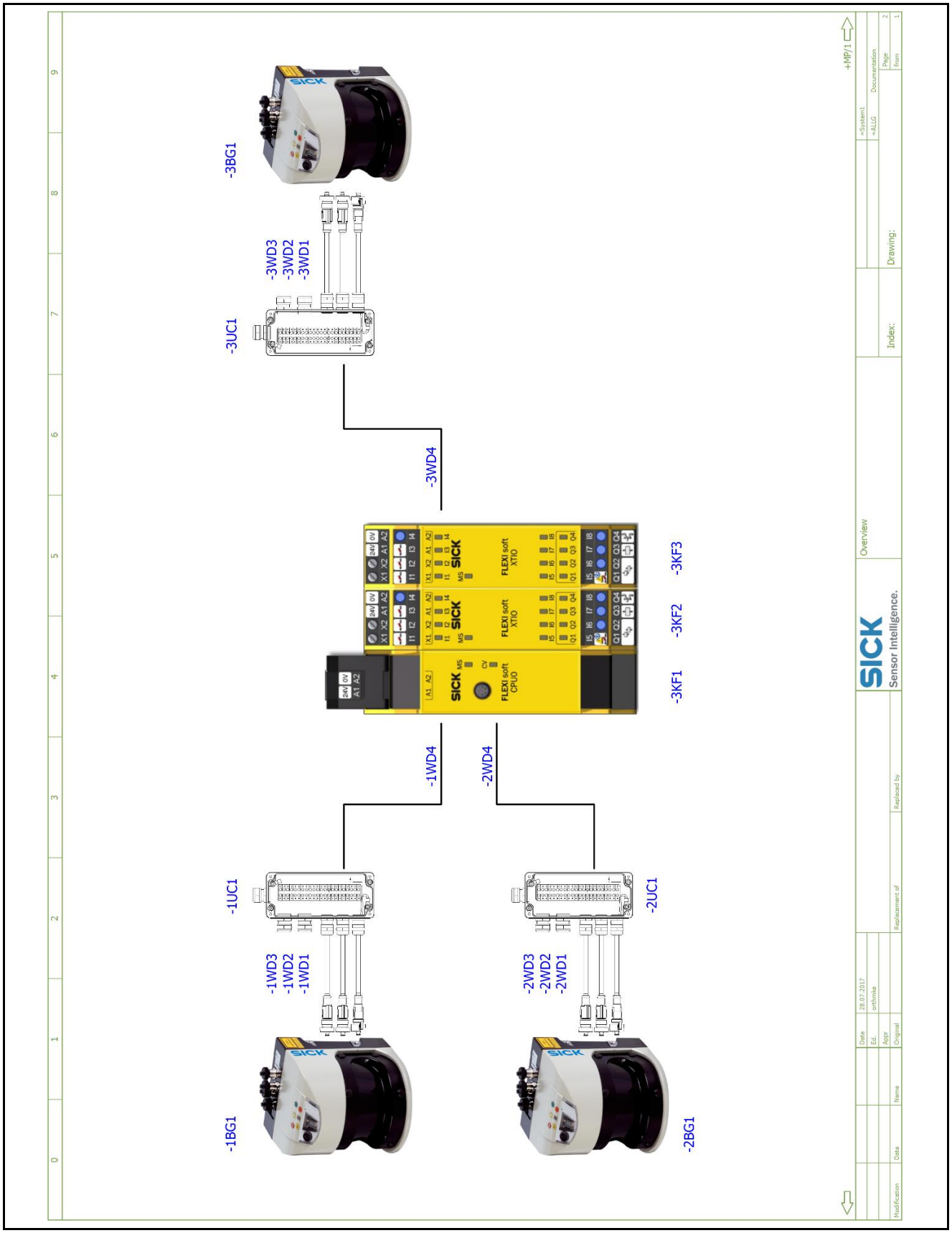

Laser scanner*

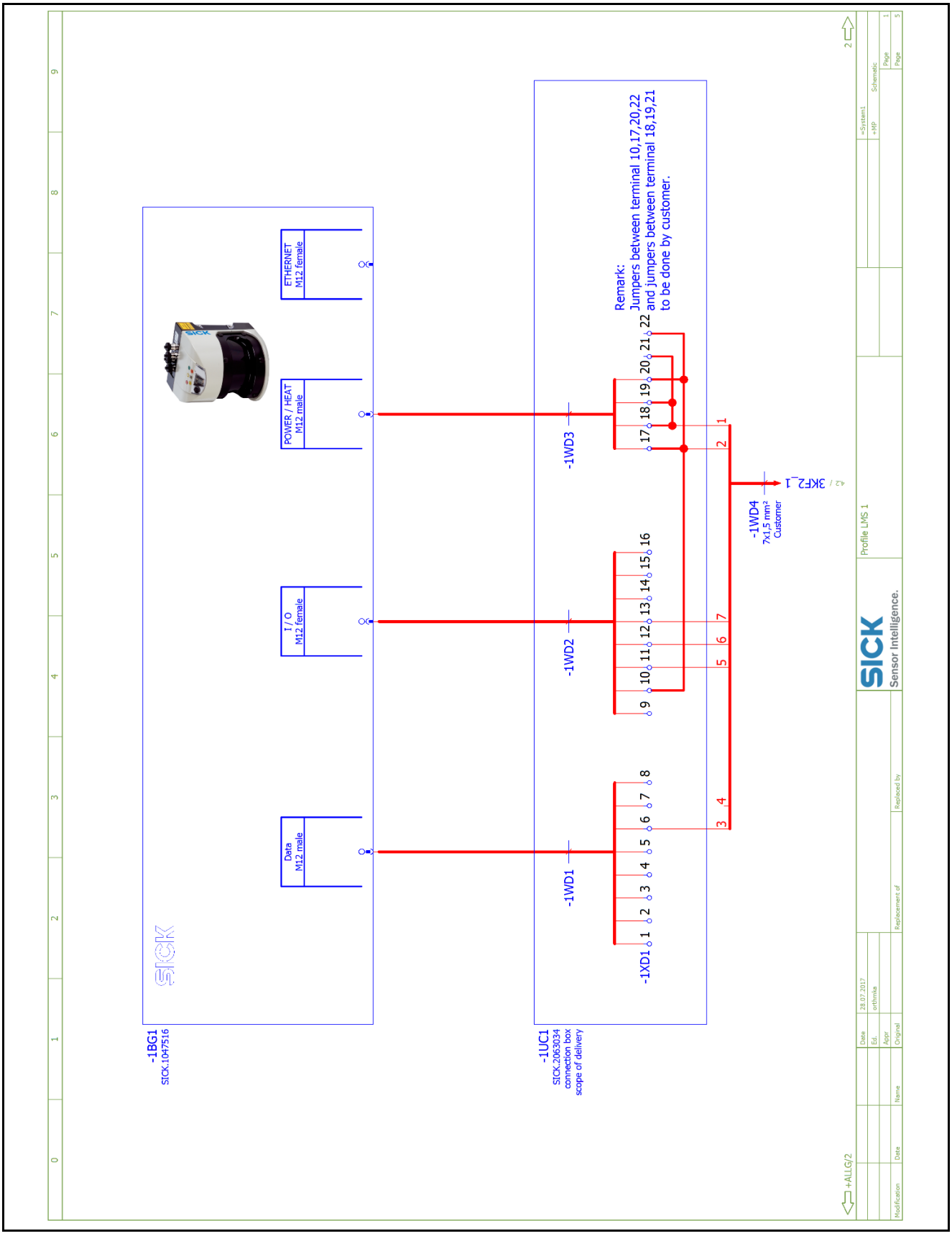

* The wiring is identical for all laser scanners.

Flexi Soft

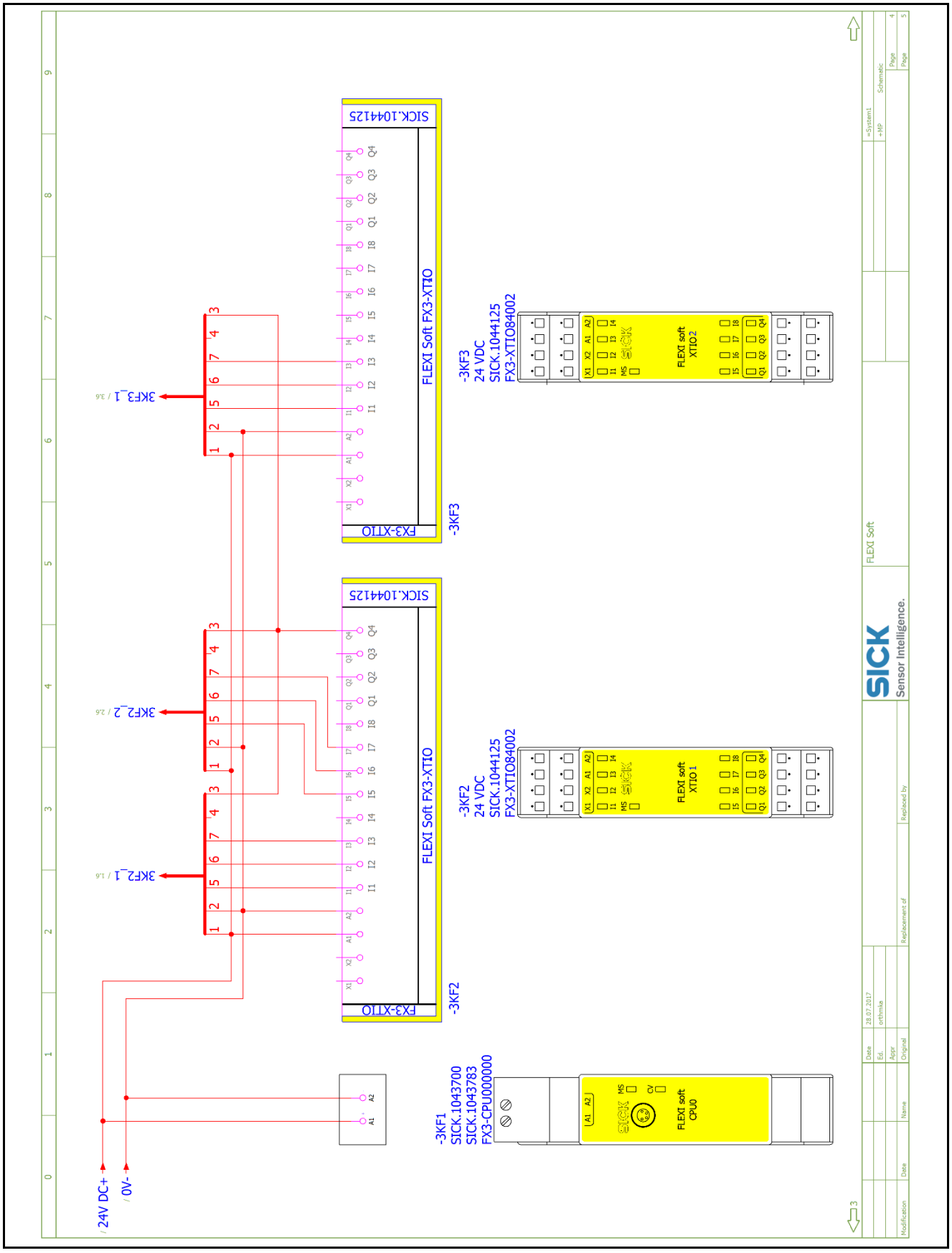
SICK.1044125
FLEXI Soft FX3-XTIO
FX3-XTIO
-3KF3
-3KF3
24 VDC
SICK.1044125
FX3-XTIO84002
FLEXI soft
XTIO 2
3KF3_1 / 3.6
SICK.1044125
FLEXI Soft FX3-XTIO
FX3-XTIO
-3KF2
-3KF2
24 VDC
SICK.1044125
FX3-XTIO84002
FLEXI soft
XTIO 1
3KF2_2 / 2.6
3KF2_1 / 1.6
-3KF1
SICK.1043700
SICK.1043783
FX3-CPU000000
FLEXI soft
CPU0
24V DC+ / 0V- /
FLEXI Soft
SICK
Sensor Intelligence.

9.4.5 AOS504 wiring diagram

Overview

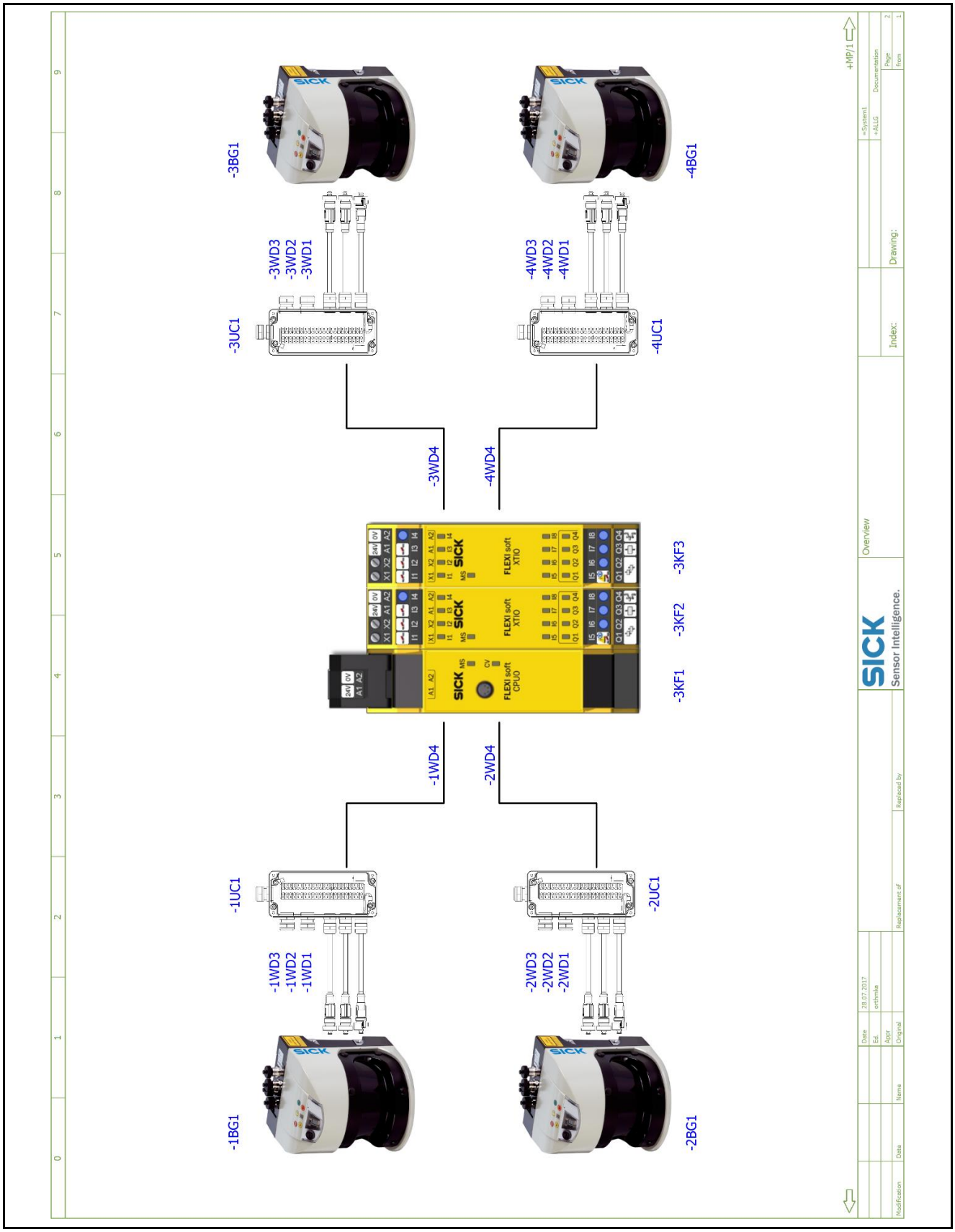

Laser scanner*

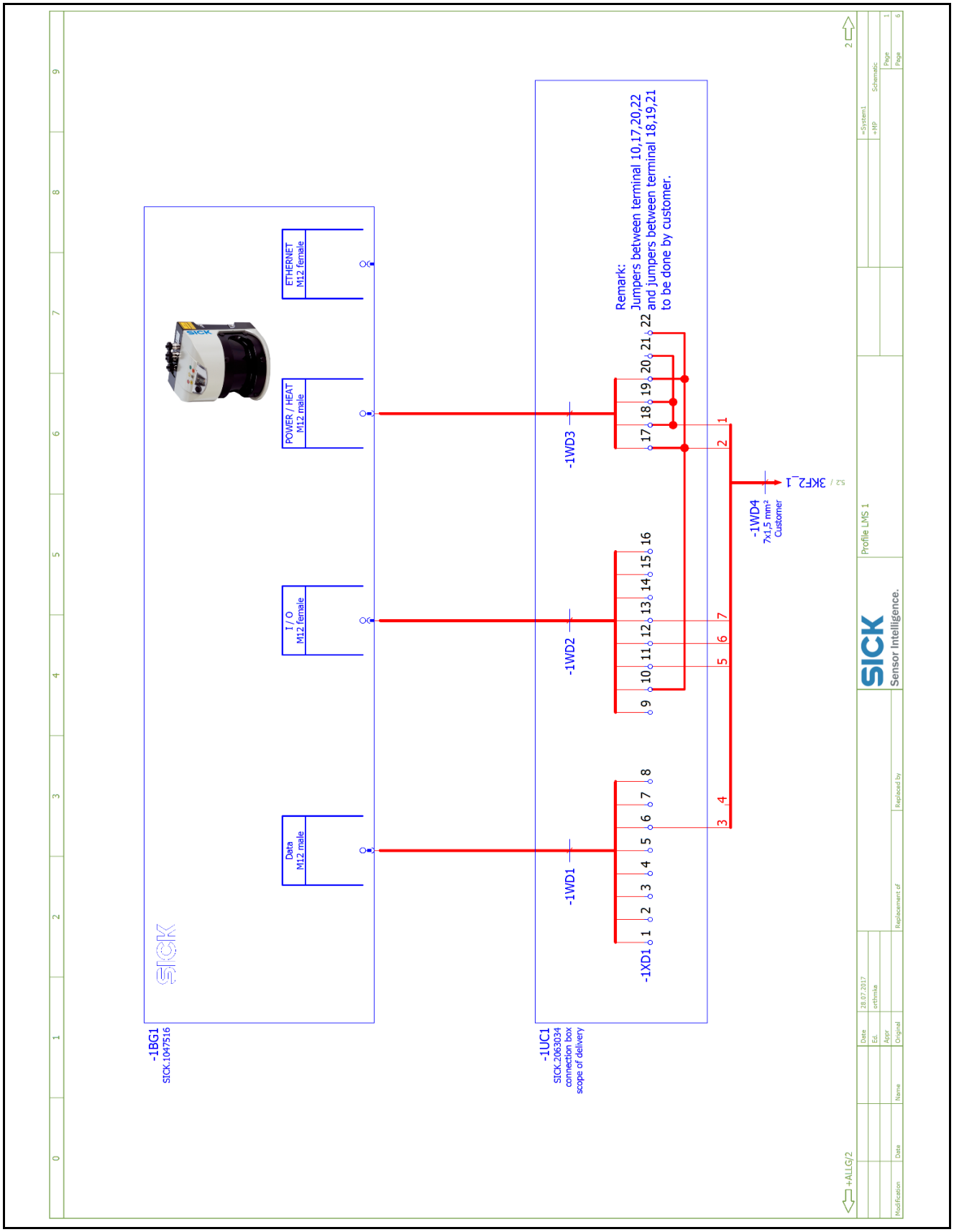

* The wiring is identical for all laser scanners.

Flexi Soft

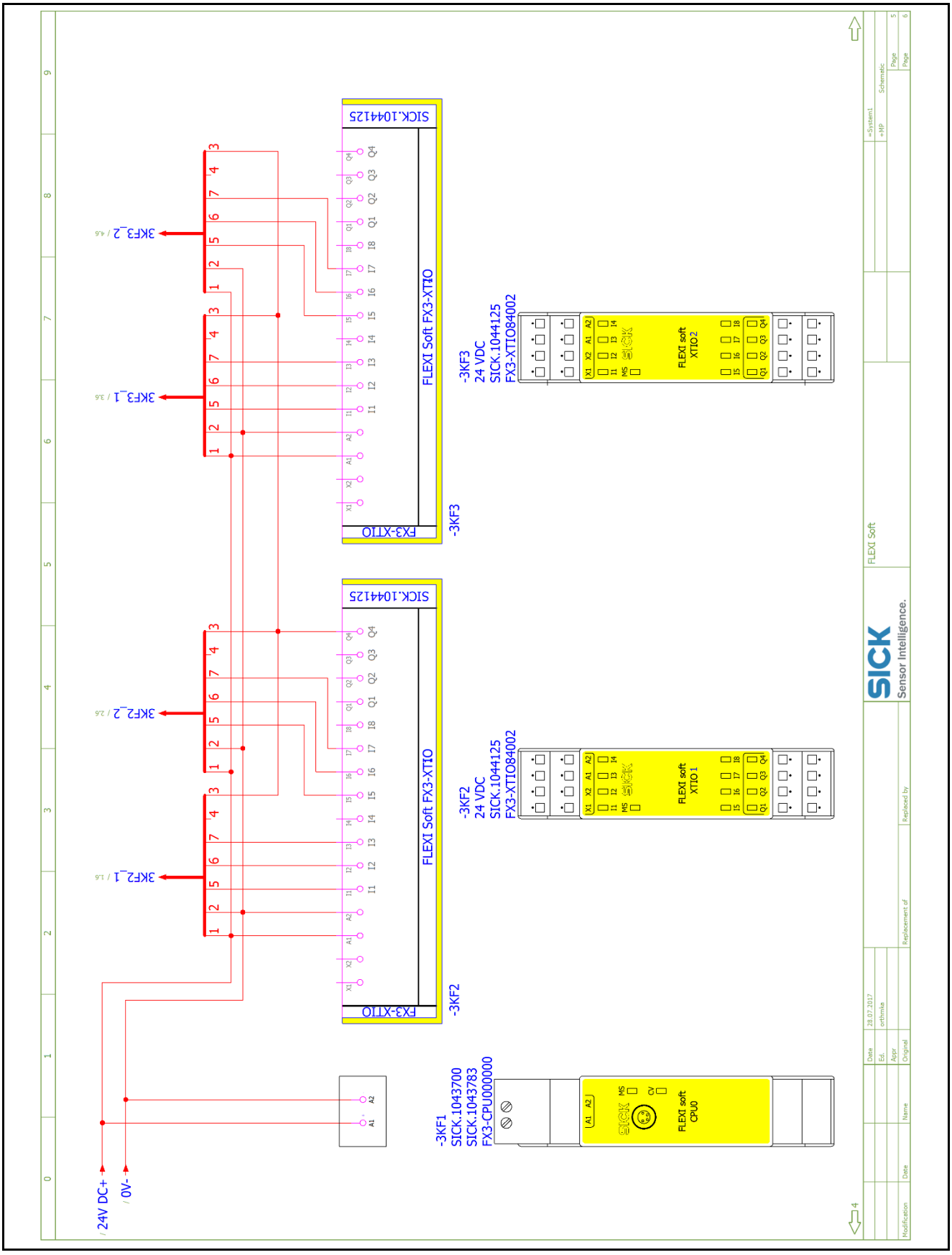
24V DC+
0V-
3KF2_1 / 1.6
3KF2_2 / 2.6
3KF3_1 / 3.6
3KF3_2 / 4.6
FX3-XTIO
FLEXI Soft FX3-XTIO
SICK.1044125
-3KF2
-3KF3
-3KF1
SICK.1043700
SICK.1043783
FX3-CPU000000
FLEXI soft CPU0
FLEXI soft XTIO 1
FLEXI soft XTIO 2
24 VDC
SICK.1044125
FX3-XTIO84002
SICK
Sensor Intelligence.
FLEXI Soft

9.4.6 AOS101 wiring diagram

Overview

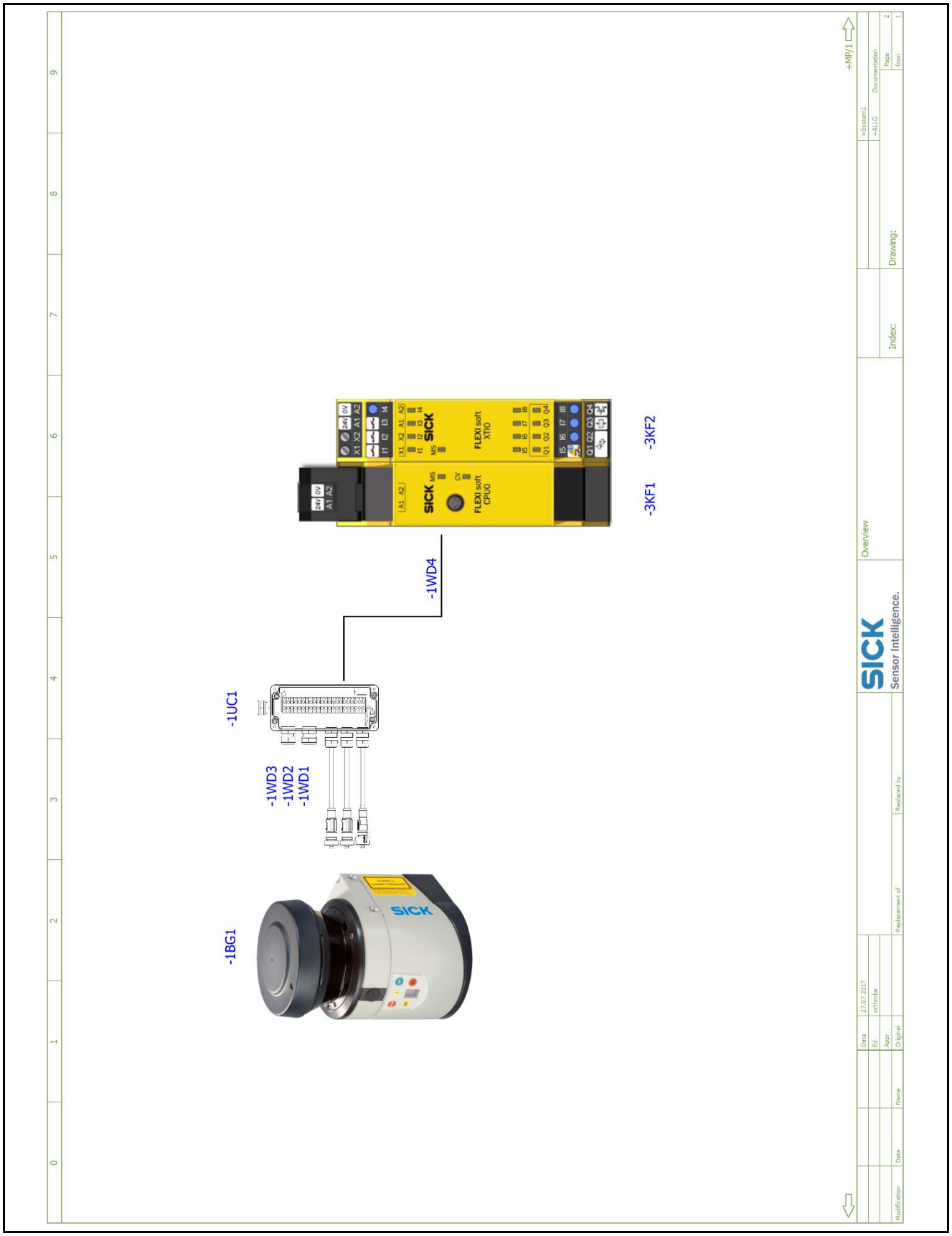

Laser scanner

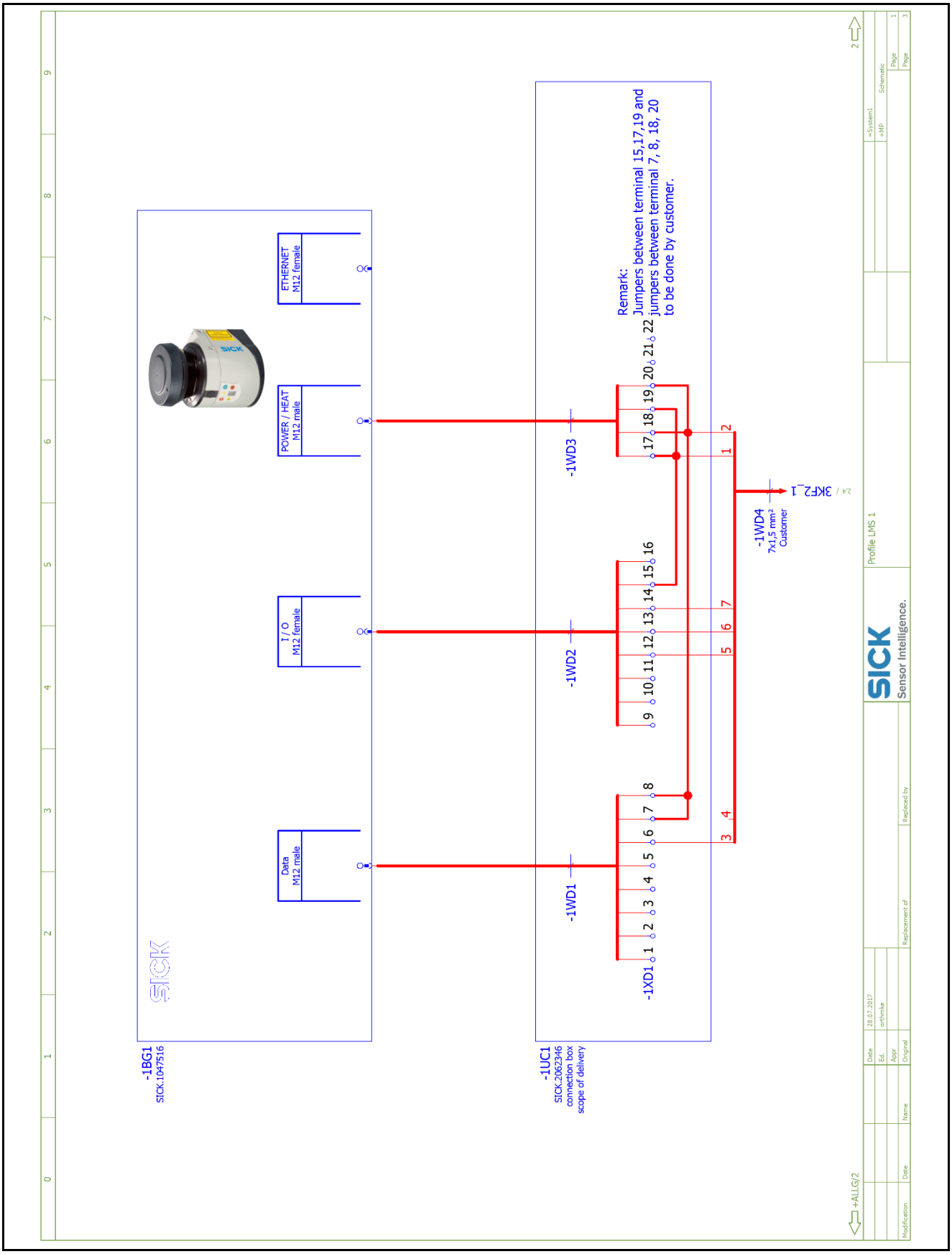

Flexi Soft

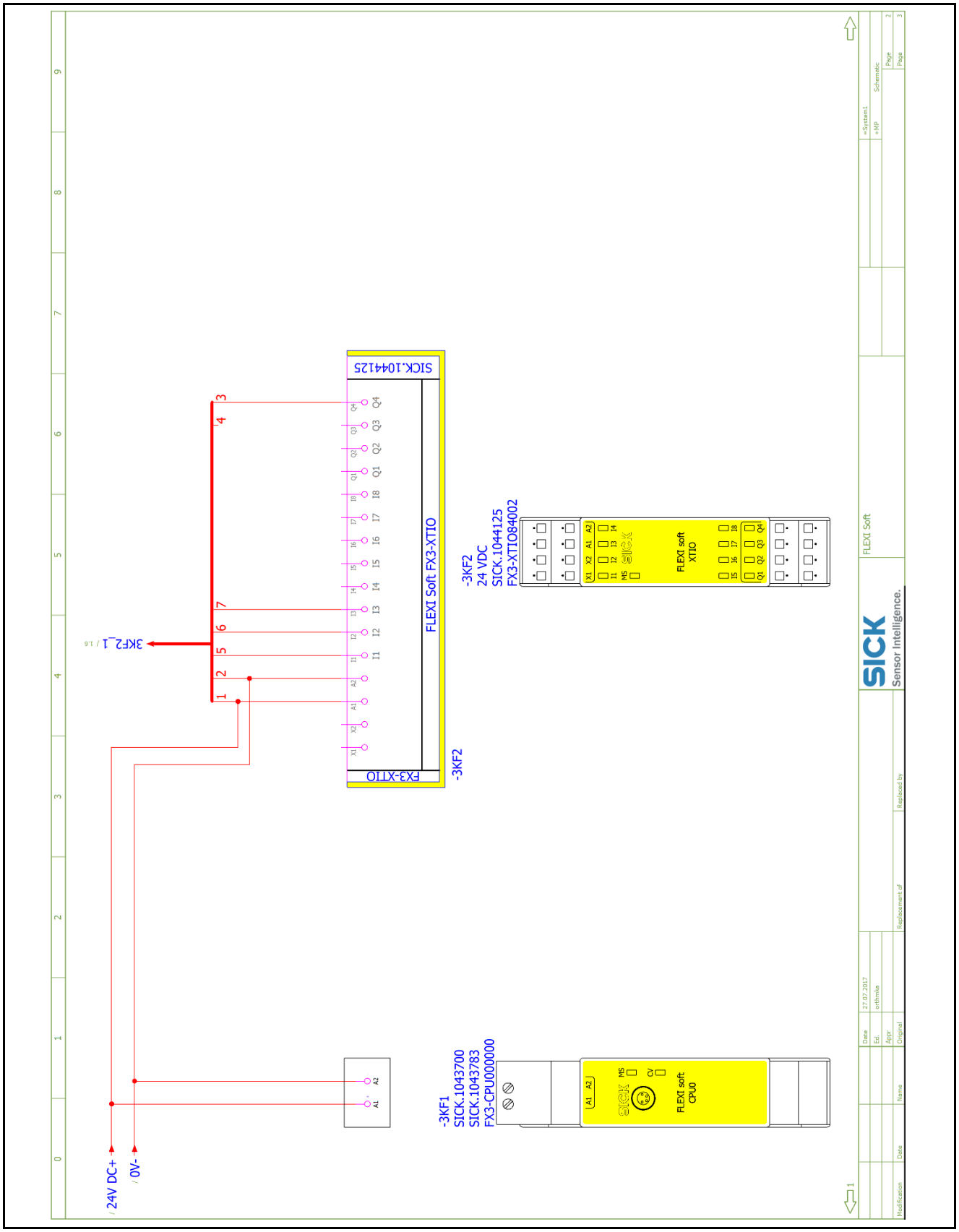
24V DC+
0V-
3KF2_1
FX3-XTIO
FLEXI Soft FX3-XTIO
SICK.1044125
-3KF2
-3KF2
24 VDC
SICK.1044125
FX3-XTIO84002
FLEXI soft
XTIO
-3KF1
SICK.1043700
SICK.1043783
FX3-CPU000000
FLEXI soft
CPU0
FLEXI Soft
SICK
Sensor Intelligence.

9.4.7 AOS102 wiring diagram

Overview

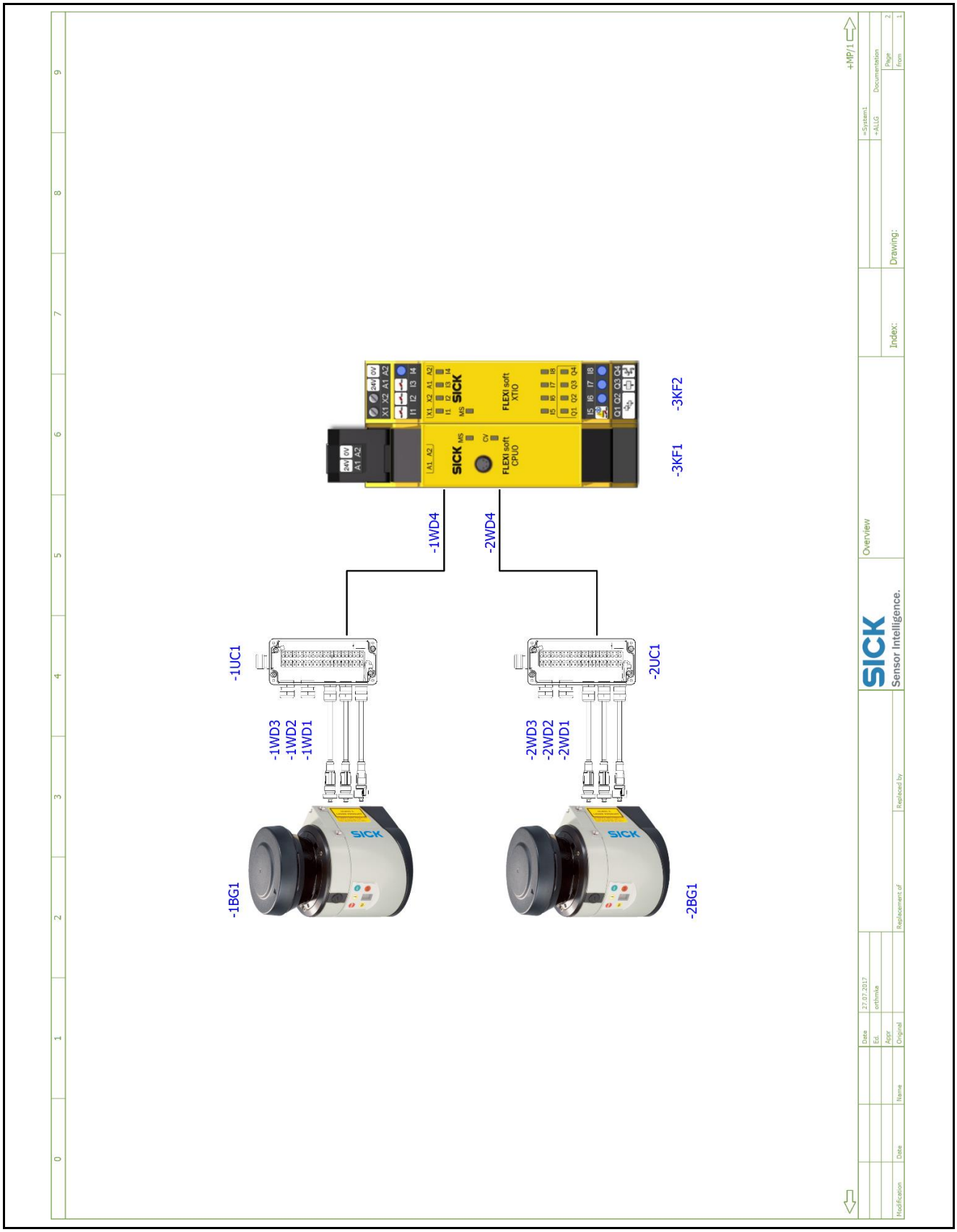

Laser scanner*

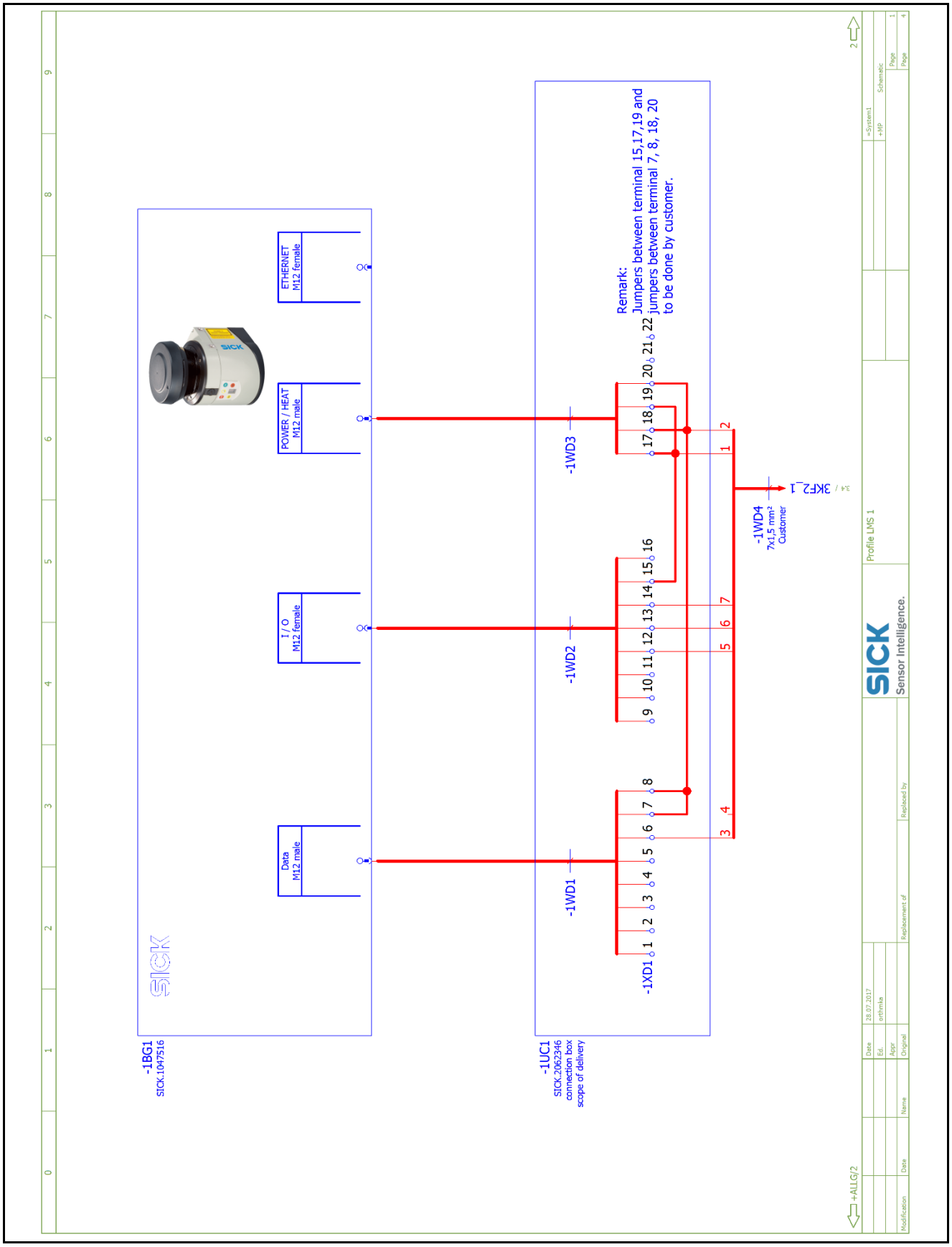

* The wiring is identical for all laser scanners.

Flexi Soft

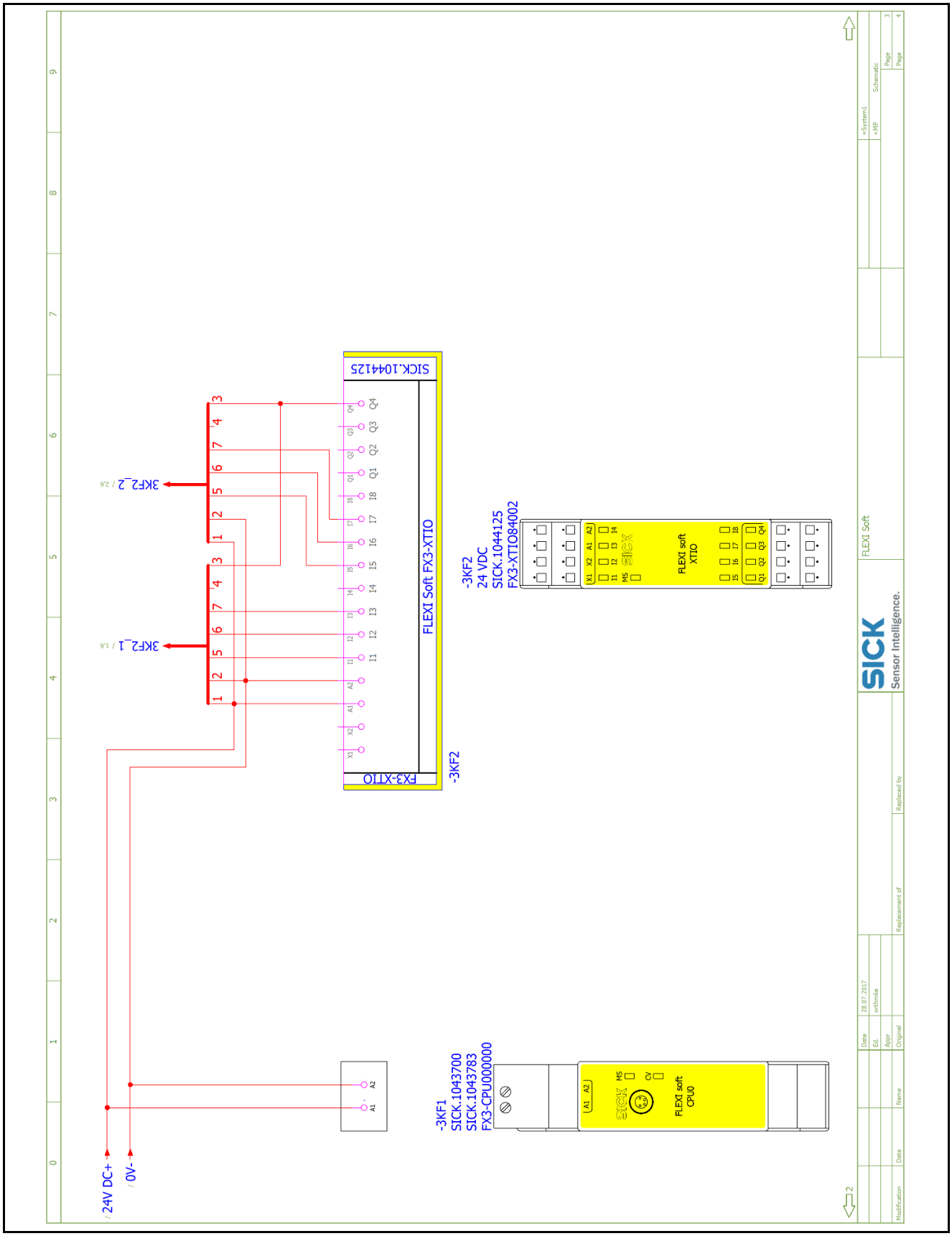
24V DC+
0V-
3KF2_1
3KF2_2
FX3-XTIO
SICK.1044125
FLEXI Soft FX3-XTIO
-3KF2
-3KF2
24 VDC
SICK.1044125
FX3-XTIO84002
FLEXI soft
XTIO
-3KF1
SICK.1043700
SICK.1043783
FX3-CPU000000
FLEXI soft
CPU0
SICK
Sensor Intelligence.
FLEXI Soft

9.4.8 AOS103 wiring diagram

Overview

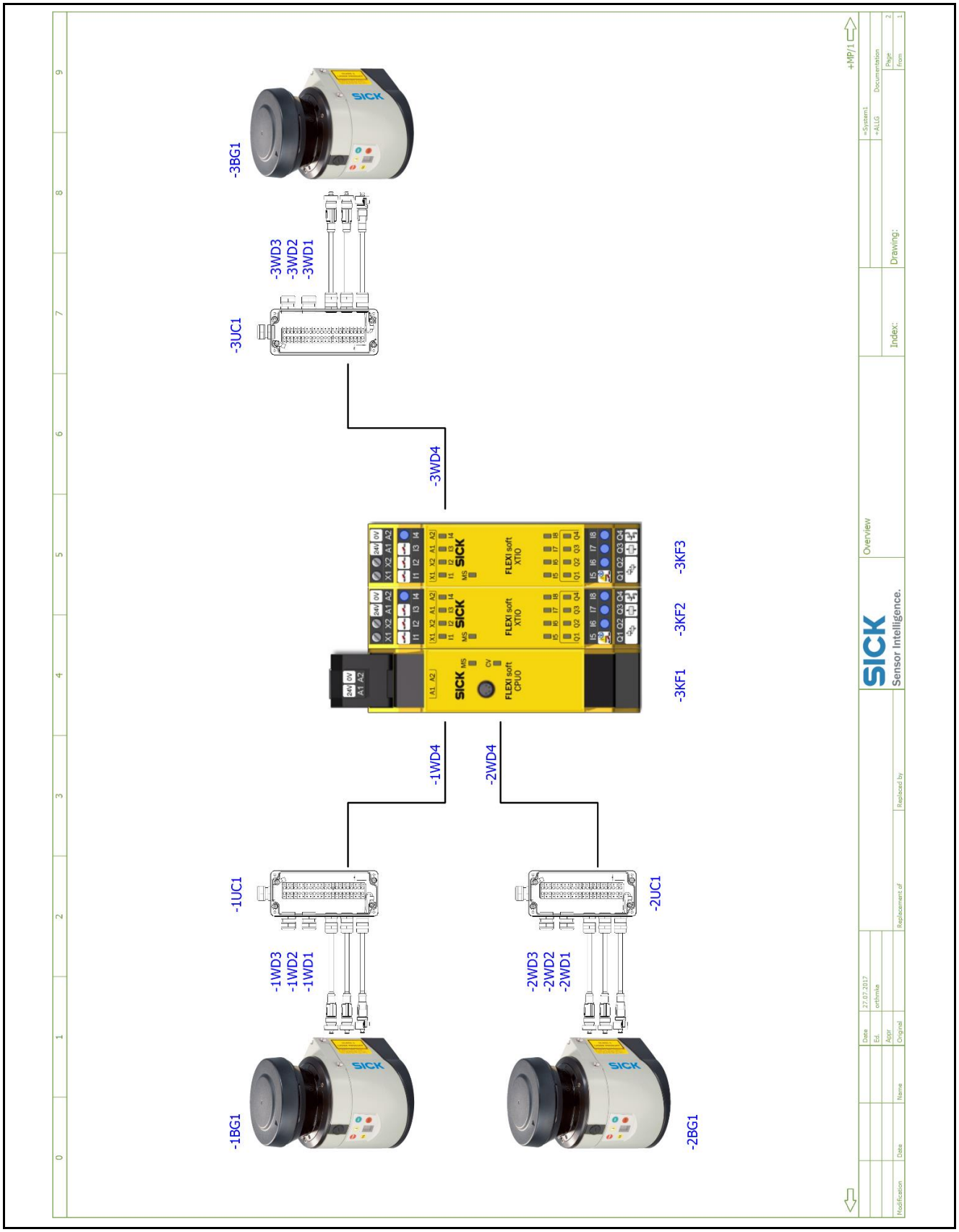

Laser scanner*

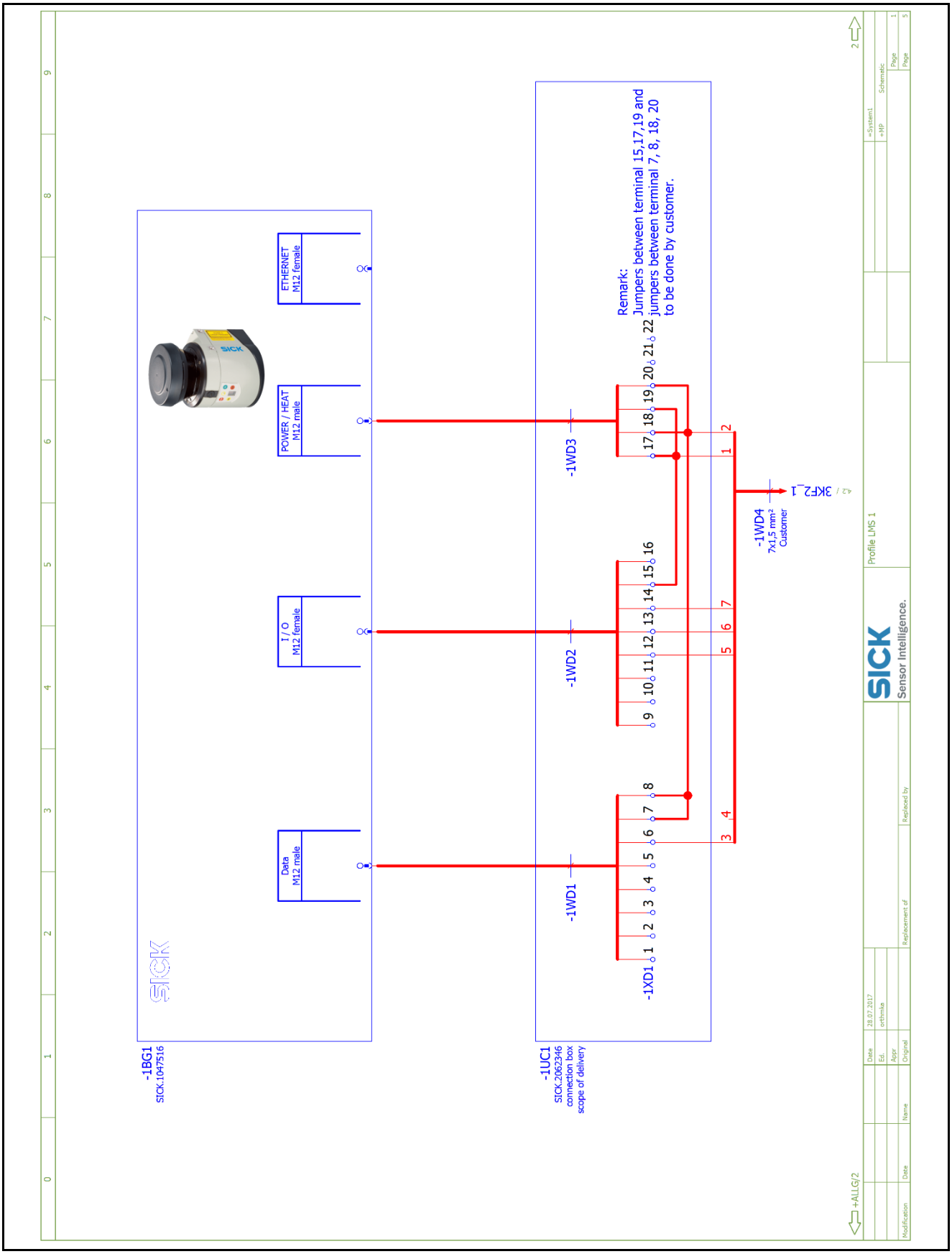

* The wiring is identical for all laser scanners.

Flexi Soft

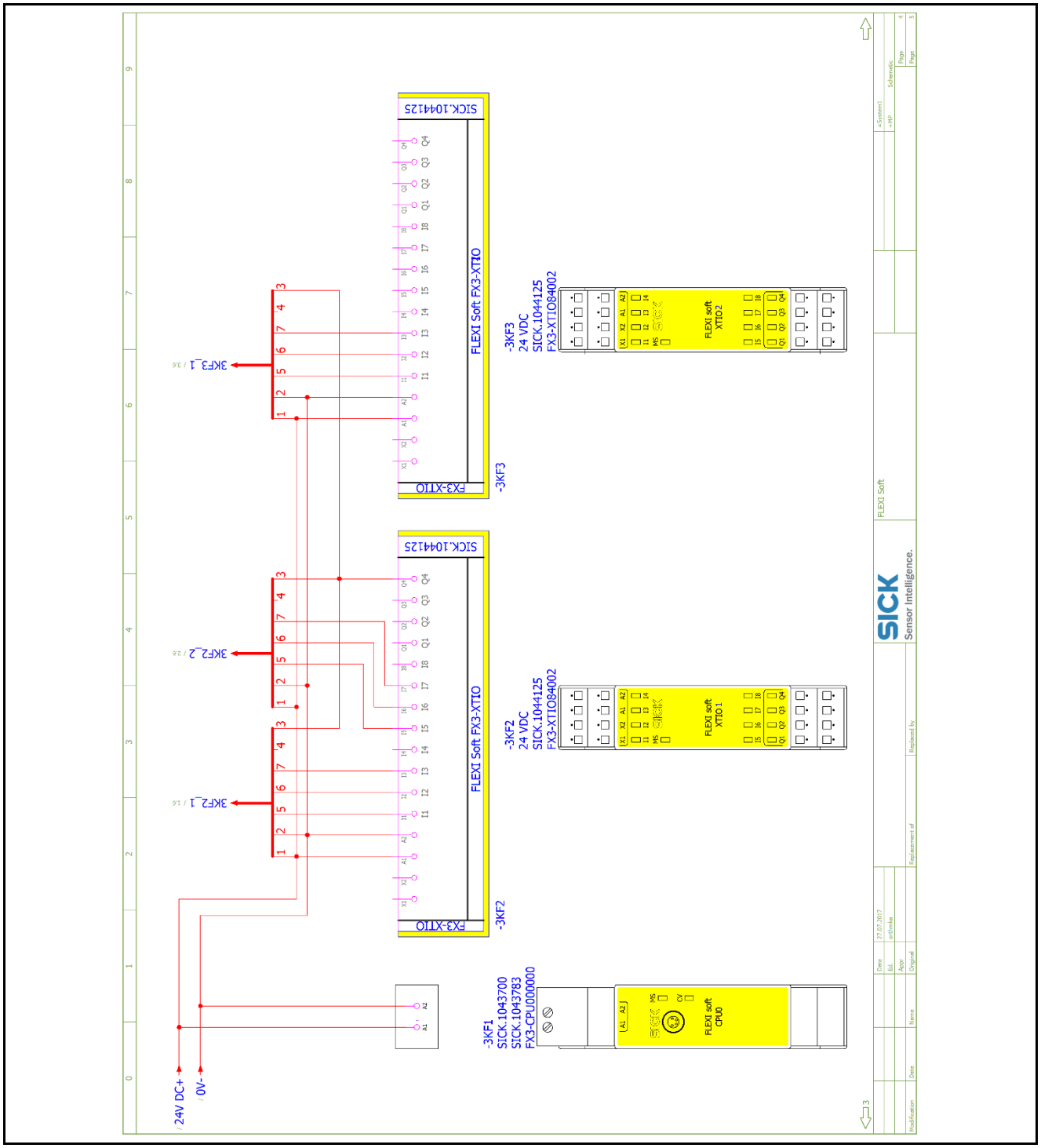
24V DC+
0V-
3KF3_1 / 3.6
3KF2_2 / 2.6
3KF2_1 / 1.6
FX3-XTIO
FLEXI Soft FX3-XTIO
SICK.1044125
-3KF2
-3KF3
-3KF1
SICK.1043700
SICK.1043783
FX3-CPU000000
FLEXI soft CPU0
-3KF2
24 VDC
SICK.1044125
FX3-XTIO84002
FLEXI soft XTIO 1
-3KF3
24 VDC
SICK.1044125
FX3-XTIO84002
FLEXI soft XTIO 2
SICK
Sensor Intelligence.
FLEXI Soft

9.4.9 AOS104 wiring diagram

Overview

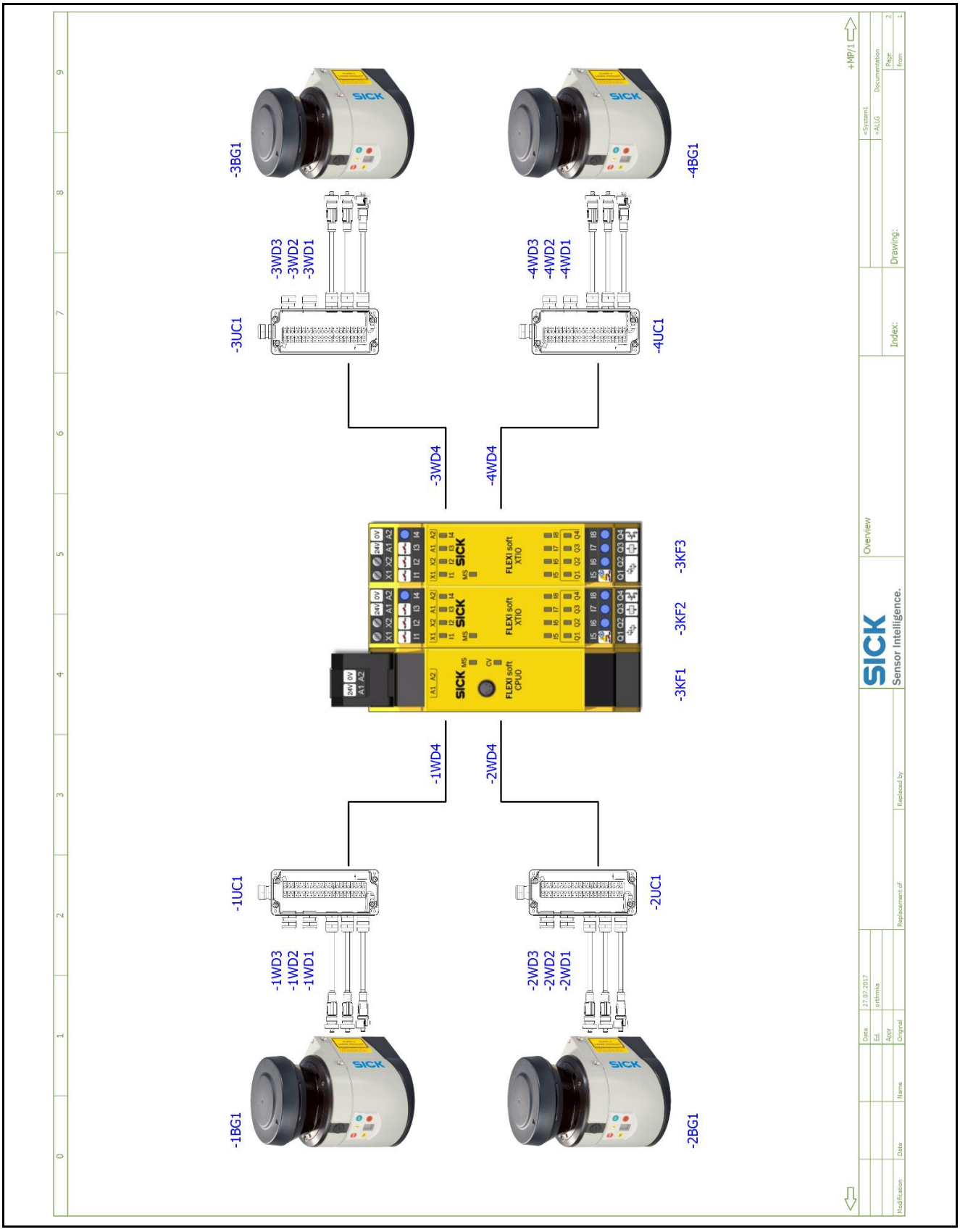

Laser scanner*

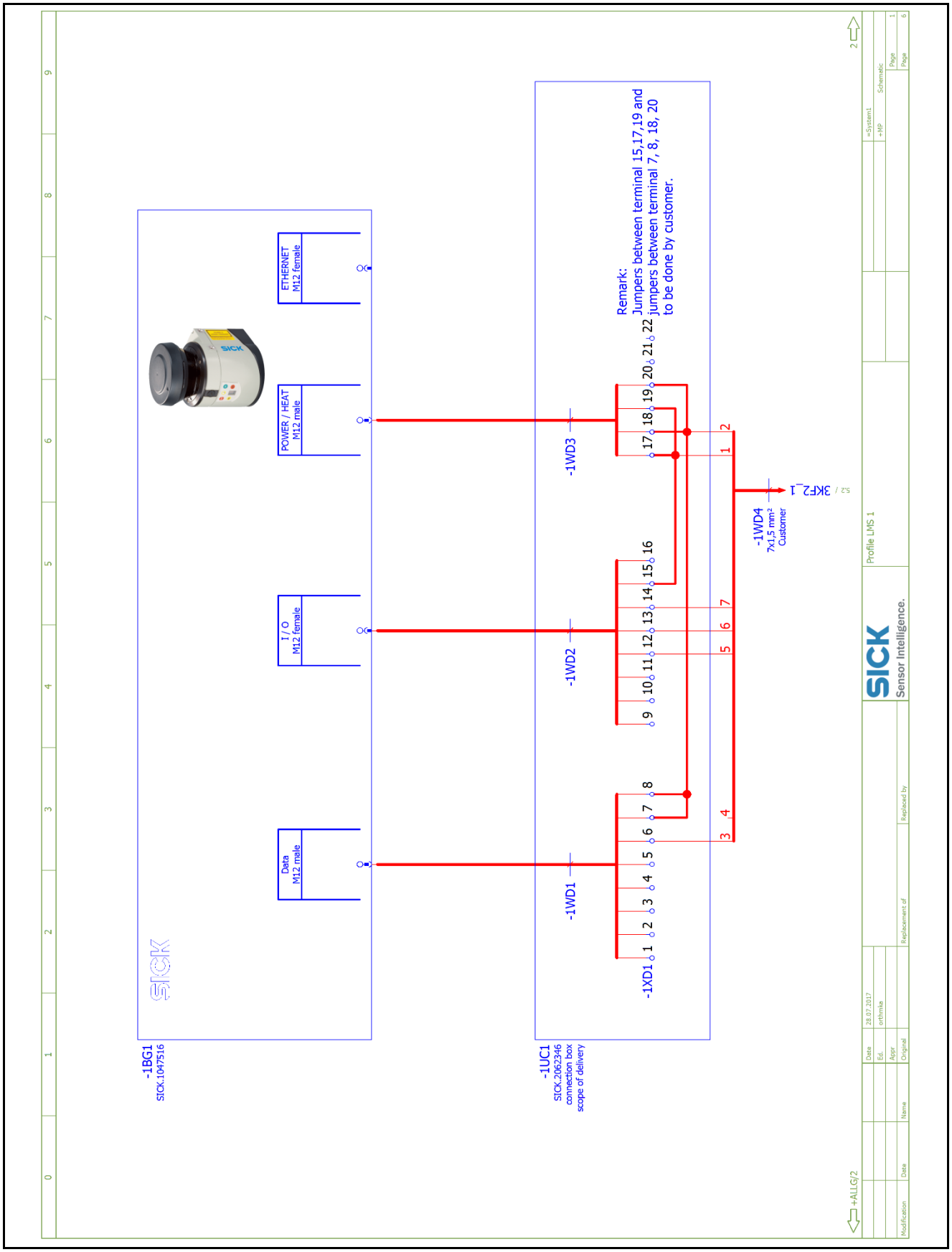

* The wiring is identical for all laser scanners.

Flexi Soft

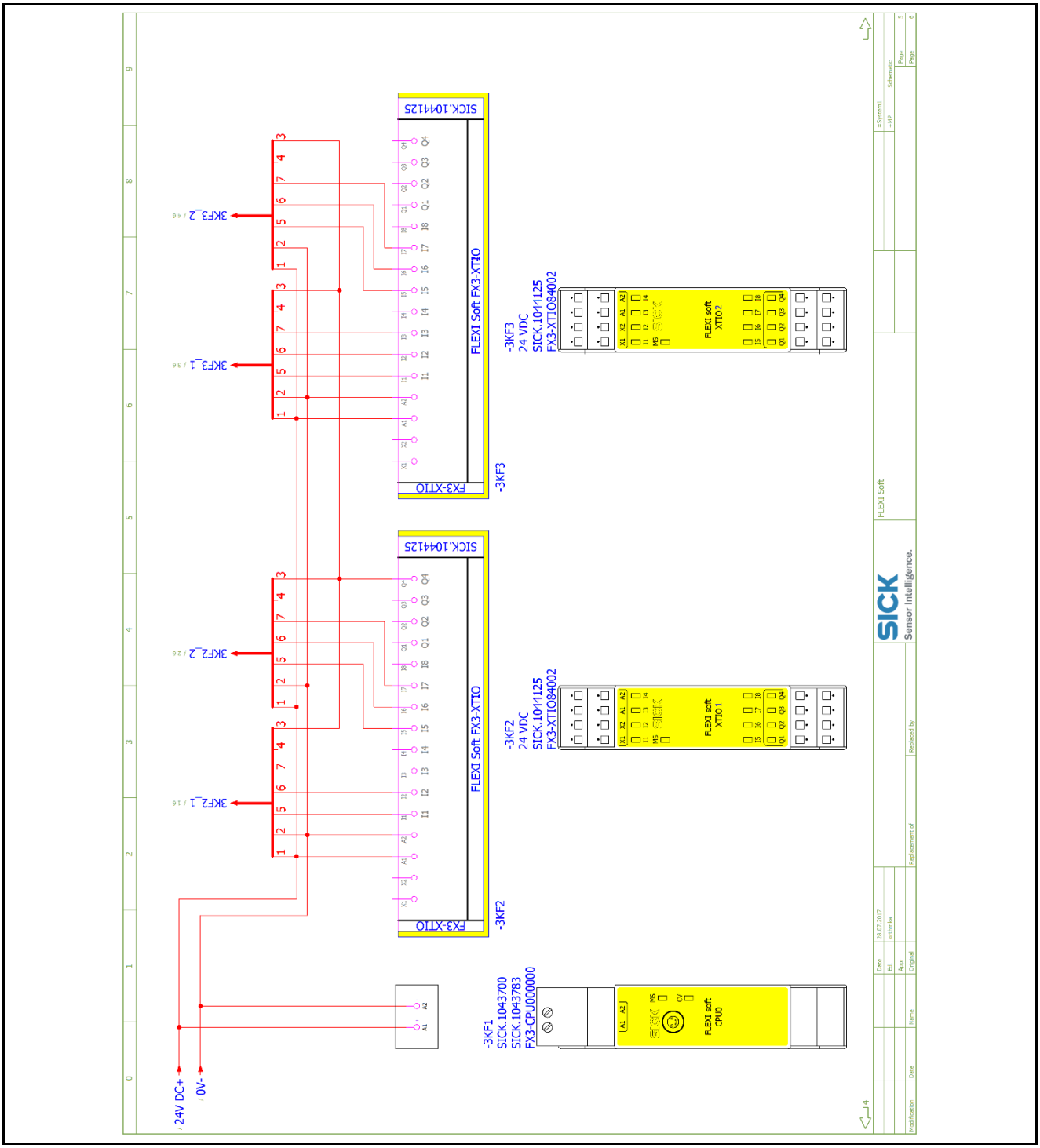
24V DC+
0V-
3KF1_1 / 1.6
3KF1_2 / 2.6
3KF3_1 / 3.6
3KF3_2 / 4.6
-3KF1
SICK.1043700
SICK.1043783
FX3-CPU000000
FLEXI soft CPU0
-3KF2
24 VDC
SICK.1044125
FX3-XTIO84002
FLEXI soft XTIO 1
FLEXI Soft FX3-XTIO
FX3-XTIO
SICK.1044125
-3KF3
24 VDC
SICK.1044125
FX3-XTIO84002
FLEXI soft XTIO 2
FLEXI Soft FX3-XTIO
FX3-XTIO
SICK.1044125
FLEXI Soft
SICK
Sensor Intelligence.

10 Appendix

10.1 List of tables

10.2 List of figures

10.3 Keywords index

Australia
Phone +61 (3) 9457 0600
1800 33 48 02 – tollfree
E-Mail sales@sick.com.au

Austria
Phone +43 (0) 2236 62288-0
E-Mail office@sick.at

Belgium/Luxembourg
Phone +32 (0) 2 466 55 66
E-Mail info@sick.be

Brazil
Phone +55 11 3215-4900
E-Mail comercial@sick.com.br

Canada
Phone +1 905.771.1444
E-Mail cs.canada@sick.com

Czech Republic
Phone +420 2 57 91 18 50
E-Mail sick@sick.cz

Chile
Phone +56 (2) 2274 7430
E-Mail chile@sick.com

China
Phone +86 20 2882 3600
E-Mail info.china@sick.net.cn

Denmark
Phone +45 45 82 64 00
E-Mail sick@sick.dk

Finland
Phone +358-9-25 15 800
E-Mail sick@sick.fi

France
Phone +33 1 64 62 35 00
E-Mail info@sick.fr

Germany
Phone +49 (0) 2 11 53 01
E-Mail info@sick.de

Hong Kong
Phone +852 2153 6300
E-Mail ghk@sick.com.hk

Hungary
Phone +36 1 371 2680
E-Mail ertekesites@sick.hu

India
Phone +91-22-6119 8900
E-Mail info@sick-india.com

Israel
Phone +972-4-6881000
E-Mail info@sick-sensors.com

Italy
Phone +39 02 27 43 41
E-Mail info@sick.it

Japan
Phone +81 3 5309 2112
E-Mail support@sick.jp

Malaysia
Phone +603-8080 7425
E-Mail enquiry.my@sick.com

Mexico
Phone +52 (472) 748 9451
E-Mail mario.garcia@sick.com

Netherlands
Phone +31 (0) 30 229 25 44
E-Mail info@sick.nl

New Zealand
Phone +64 9 415 0459
0800 222 278 – tollfree
E-Mail sales@sick.co.nz

Norway
Phone +47 67 81 50 00
E-Mail sick@sick.no

Poland
Phone +48 22 539 41 00
E-Mail info@sick.pl

Romania
Phone +40 356-17 11 20
E-Mail office@sick.ro

Russia
Phone +7 495 283 09 90
E-Mail info@sick.ru

Singapore
Phone +65 6744 3732
E-Mail sales.gsg@sick.com

Slovakia
Phone +421 482 901 201
E-Mail mail@sick-sk.sk

Slovenia
Phone +386 591 78849
E-Mail office@sick.si

South Africa
Phone +27 (0)11 472 3733
E-Mail info@sickautomation.co.za

South Korea
Phone +82 2 786 6321
E-Mail info@sickkorea.net

Spain
Phone +34 93 480 31 00
E-Mail info@sick.es

Sweden
Phone +46 10 110 10 00
E-Mail info@sick.se

Switzerland
Phone +41 41 619 29 39
E-Mail contact@sick.ch

Taiwan
Phone +886-2-2375-6288
E-Mail sales@sick.com.tw

Thailand
Phone +66 2 645 0009
E-Mail marcom.th@sick.com

Turkey
Phone +90 (216) 528 50 00
E-Mail info@sick.com.tr

United Arab Emirates
Phone +971 (0) 4 88 65 878
E-Mail info@sick.ae

United Kingdom
Phone +44 (0)17278 31121
E-Mail info@sick.co.uk

USA
Phone +1 800.325.7425
E-Mail info@sick.com

Vietnam
Phone +65 6744 3732
E-Mail sales.gsg@sick.com

Further locations at **www.sick.com**