Product data sheet

HL18-P4A3AA

H18 Sure Sense

HYBRID PHOTOELECTRIC SENSORS

SICK
Sensor Intelligence.

Illustration may differ

Ordering information

Type	Part no.
HL18-P4A3AA	1070985

Other models and accessories ➜ www.sick.com/H18_Sure_Sense

Detailed technical data

Features

Functional principle	Photoelectric retro-reflective sensor
Functional principle detail	With minimum distance to reflector (dual lens system)
Dimensions (W x H x D)	16.2 mm x 48.5 mm x 31.8 mm
Housing design (light emission)	Hybrid
Thread diameter (housing)	M18
Mounting system type	M18, head/side (24.1 ... 25.4 mm)
Housing color	Blue
Sensing range max.	0.03 m ... 6.5 m [1]
Sensing range	0.03 m ... 5 m [1]
Type of light	Visible red light
Light source	PinPoint LED [2]
Light spot size (distance)	130 mm x 260 mm (6.5 m)
Wave length	631 nm
Adjustment	
Potentiometer, right	None
Potentiometer, left	None
Special features	-

[1] Reflector PL80A.
[2] Average service life: 100,000 h at T_U = +25 °C.

Mechanics/electronics

Supply voltage	10 V DC ... 30 V DC
Ripple	< 5 V_{pp} [1]
Current consumption	≤ 20 mA [2]
Switching output	PNP
Output function	Complementary
Switching mode	Light/dark switching
Switching output detail	
Switching output Q1	PNP, Light switching
Switching output Q2	PNP, Dark switching
Output current $I_{max.}$	≤ 100 mA
Response time	≤ 0.5 ms [3]
Switching frequency	1,000 Hz [4]
Connection type	Male connector M12, 4-pin
Circuit protection	A [5] B [6] D [7]
Protection class	III
Weight	18 g
Polarisation filter	✓
Housing material	Plastic, VISTAL®
Optics material	Plastic, PMMA
Enclosure rating	IP67 IP69K
Items supplied	Fastening nut (1x), M18, plastic, black, flat
Electromagnetic compatibility (EMC)	EN 60947-5-2 (The sensor complies with the Radio Safety Requirements (EMC) for the industrial sector (Radio Safety Class A). It may cause radio interference if used in a residential area.)
Ambient operating temperature	–40 °C ... +70 °C
Ambient temperature, storage	–40 °C ... +75 °C
UL File No.	E189383

[1] May not fall below or exceed U_V tolerances.
[2] Without signal strength light bar and load.
[3] Signal transit time with resistive load.
[4] With light/dark ratio 1:1.
[5] A = V_S connections reverse-polarity protected.
[6] B = inputs and output reverse-polarity protected.
[7] D = outputs overcurrent and short-circuit protected.

Safety-related parameters

$MTTF_D$	936.1 years
DC_{avg}	0 %

Classifications

ECLASS 5.0	27270902
ECLASS 5.1.4	27270902

ECLASS 6.0	27270902
ECLASS 6.2	27270902
ECLASS 7.0	27270902
ECLASS 8.0	27270902
ECLASS 8.1	27270902
ECLASS 9.0	27270902
ECLASS 10.0	27270902
ECLASS 11.0	27270902
ECLASS 12.0	27270902
ETIM 5.0	EC002717
ETIM 6.0	EC002717
ETIM 7.0	EC002717
ETIM 8.0	EC002717
UNSPSC 16.0901	39121528

Connection type/pinouts

Connection type	Male connector M12, 4-pin
Pinouts	
BN 1	+ (L+)
WH 2	Q_2
BU 3	- (M)
BK 4	Q_1

Dimensional drawing (Dimensions in mm (inch))

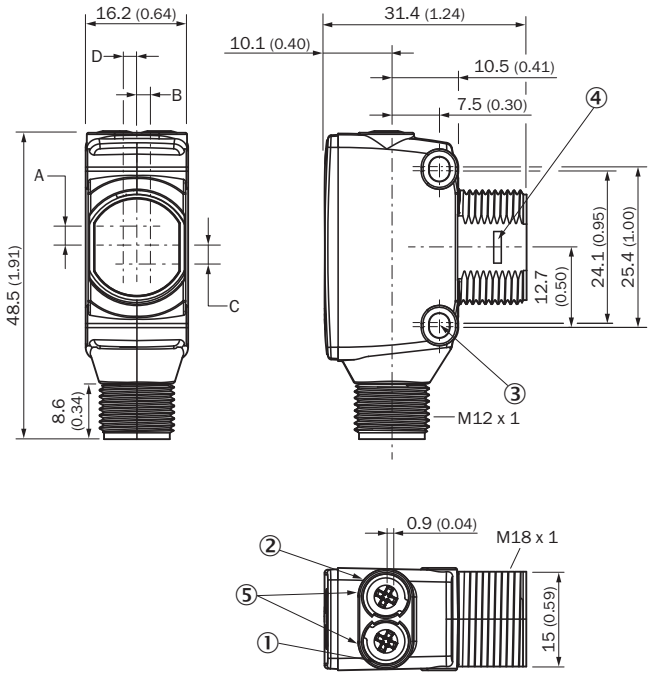

① LED indicator yellow: Status of received light beam
② LED indicator green: power on
③ M3 mounting hole
④ Snap Connection for flush ring (sold seperatly)
⑤ Potentiometer (if selected) or LED Indicators

Dimensions in mm (inch)	Receiver		Sender	
	A	**B**	**C**	**D**
HTB18 / HTF18	- 1.1 (0.04)	1.1 (0.04)	4.7 (0.19)	0.6 (0.02)
HTE18 / HL18 / HSE18	2.5 (0.1)	0.0 (0.0)	4.0 (0.16)	0.0 (0.0)
HTB18L / HTF18L / HL18L / HSE18L	2.5 (0.1)	0.0 (0.0)	3.5 (0.14)	0.0 (0.0)

Connection type

Pinouts, see technical data: **Connection type/pinouts**

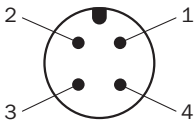

M12 male connector, 4-pin, A-coding

Characteristic curve

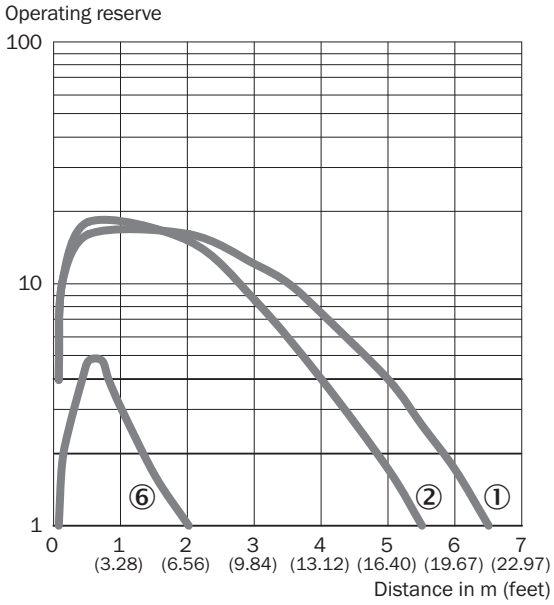

① Reflector PL80A
② Reflector PL40A
⑥ Reflective tape IREF6000 (REF-IRF-56)

Light spot size

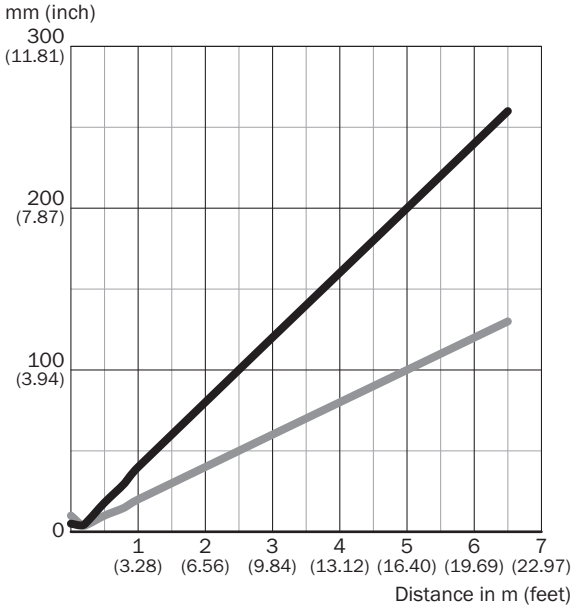

Dimensions in mm (inch)

Sensing range	Horizontal	Vertical
0.5 m (1.64 feet)	18 (0.71)	10 (0.39)
1 m (3.28 feet)	40 (1.57)	20 (0.79)
5 m (16.40 feet)	200 (7.87)	100 (3.94)
6.5 m (21.33 feet)	260 (10.24)	130 (5.12)

Horizontal
Vertical

Sensing range diagram

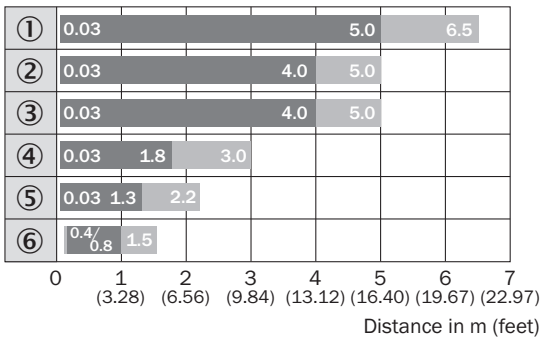

Sensing range Sensing range max.

① Reflector PL80A
② Reflector PL40A
③ Reflector P250
④ Reflector PL30A, PL31A
⑤ Reflector PL20A
⑥ Reflective tape IREF6000 (REF-IRF-56)

Functions

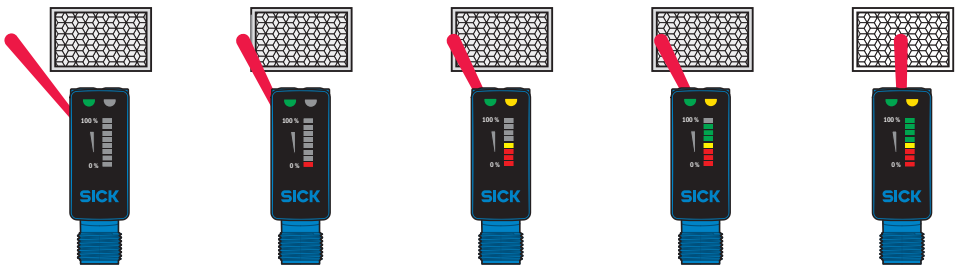

Recommended accessories

Other models and accessories → www.sick.com/H18_Sure_Sense

	Brief description	Type	Part no.
Mounting brackets and plates			
	Universal mounting bracket for reflectors, steel, zinc coated	BEF-WN-REFX	2064574
Reflectors			
	Rectangular, screw connection, 51 mm x 61 mm, PMMA/ABS, Screw-on, 2 hole mounting	P250	5304812

	Brief description	Type	Part no.
Others			
	• **Connection type head A:** Female connector, M12, 4-pin, straight, A-coded • **Connection type head B:** Flying leads • **Signal type:** Sensor/actuator cable • **Cable:** 5 m, 4-wire, PVC • **Description:** Sensor/actuator cable, unshielded • **Application:** Zones with chemicals	YF2A14-050VB3XLEAX	2096235
	• **Connection type head A:** Male connector, M12, 4-pin, straight, A-coded • **Description:** Unshielded • **Connection systems:** Screw-type terminals • **Permitted cross-section:** ≤ 0.75 mm²	STE-1204-G	6009932

SICK AT A GLANCE

SICK is one of the leading manufacturers of intelligent sensors and sensor solutions for industrial applications. A unique range of products and services creates the perfect basis for controlling processes securely and efficiently, protecting individuals from accidents and preventing damage to the environment.

We have extensive experience in a wide range of industries and understand their processes and requirements. With intelligent sensors, we can deliver exactly what our customers need. In application centers in Europe, Asia and North America, system solutions are tested and optimized in accordance with customer specifications. All this makes us a reliable supplier and development partner.

Comprehensive services complete our offering: SICK LifeTime Services provide support throughout the machine life cycle and ensure safety and productivity.

For us, that is "Sensor Intelligence."

WORLDWIDE PRESENCE:

Contacts and other locations –www.sick.com

SICK
Sensor Intelligence.