Product data sheet

RFU610-10605

RFU61x

RFID

SICK
Sensor Intelligence.

Ordering information

Type	Part no.
RFU610-10605	1101394

Included in delivery: Mounting kit (1)

Other models and accessories → www.sick.com/RFU61x

Detailed technical data

Features

Task	Identifying - RFID transponder
Version	Short Range
Product category	RFID read/write device with integrated antenna
Radio approval	China Thailand
Frequency band	UHF (860 MHz ... 960 MHz)
Carrier frequency	920.625 MHz ... 924.375 MHz
Output power	25 mW (ERP, 14 dBm)
RFID standard	EPCglobal UHF Class 1 Generation 2, ISO/IEC 18000-6 C
Modulation	PR-ASK
Connection type	PoE, Power and Ethernet
Aperture angle	110°
Read range	≤ 0.5 m [1]
Antenna	Integrated
Transmitting power	Adjustable
Polarization	Circular
Axial ratio	Typ. 3 dB
Front-to-back ratio	> 5 dB

[1] Depending on transponder used and ambient conditions.

Mechanics/electronics

Connection type	1 x M12, 4-pin male connector, A-coded 1 x M12, 8-pin female connector, X-coded 1 x M8, 4-pin female connector, A-coded 1 x USB, 5-pin micro-B socket
Supply voltage	18 V DC ... 30 V DC [1]
Power consumption	6 W, standby 3 W

[1] PoE: 48 V DC ... 57 V DC in accordance with PoE technology.
[2] Operation at +50 °C.

Housing material	Aluminum die cast Plastic (PPS)
Enclosure rating	IP67
Protection class	III
Weight	313 g
Dimensions (L x W x H)	92 mm x 80 mm x 38 mm
MTBF	22 years [2]

[1] PoE: 48 V DC ... 57 V DC in accordance with PoE technology.
[2] Operation at +50 °C.

Interfaces

Ethernet	✓, TCP/IP, PoE, OPC UA
Remark	Companion Spec V1.0 from firmware 2.20
Function	Data interface (read result output), Service interface
Data transmission rate	10/100 MBit/s
PROFINET	✓
Function	PROFINET Single Port, Data interface (read result output)
Data transmission rate	10/100 MBit/s
EtherNet/IP™	✓
Function	Data interface (read result output)
Data transmission rate	10/100 MBit/s
USB	✓
Remark	USB 2.0
Function	Service interface
Digital inputs	1 (physical, switching, trigger sensor can be connected directly to the device (port 3) - max. 40 mA)
Optical indicators	4 LEDs, multi-color (device status) 4 RGB LED (Process feedback)
Operator interfaces	Web server
Configuration software	SOPAS ET [1]
Programming interface	Application-specific programming using the SICK AppStudio development environment
Memory card	microSD memory card (parameter cloning, data storage)

[1] Another alternative is to generate your own configuration tools based on the SICK command language CoLa (e.g. in your own software or on PLC function blocks).

Ambient data

Electromagnetic compatibility (EMC)	EN 301489-3
Vibration resistance	EN 60068-2-6:2007
Shock resistance	EN 60068-2-27:2008
Ambient operating temperature	–25 °C ... +50 °C
Storage temperature	–40 °C ... +70 °C
Permissible relative humidity	90 %, Non-condensing

Classifications

ECLASS 5.0	27280401
ECLASS 5.1.4	27280401

ECLASS 6.0	27280401
ECLASS 6.2	27280401
ECLASS 7.0	27280401
ECLASS 8.0	27280401
ECLASS 8.1	27280401
ECLASS 9.0	27280401
ECLASS 10.0	27280401
ECLASS 11.0	27280401
ECLASS 12.0	27280401
ETIM 6.0	EC002998
ETIM 7.0	EC002998
ETIM 8.0	EC002998
UNSPSC 16.0901	52161523

Dimensional drawing (Dimensions in mm (inch))

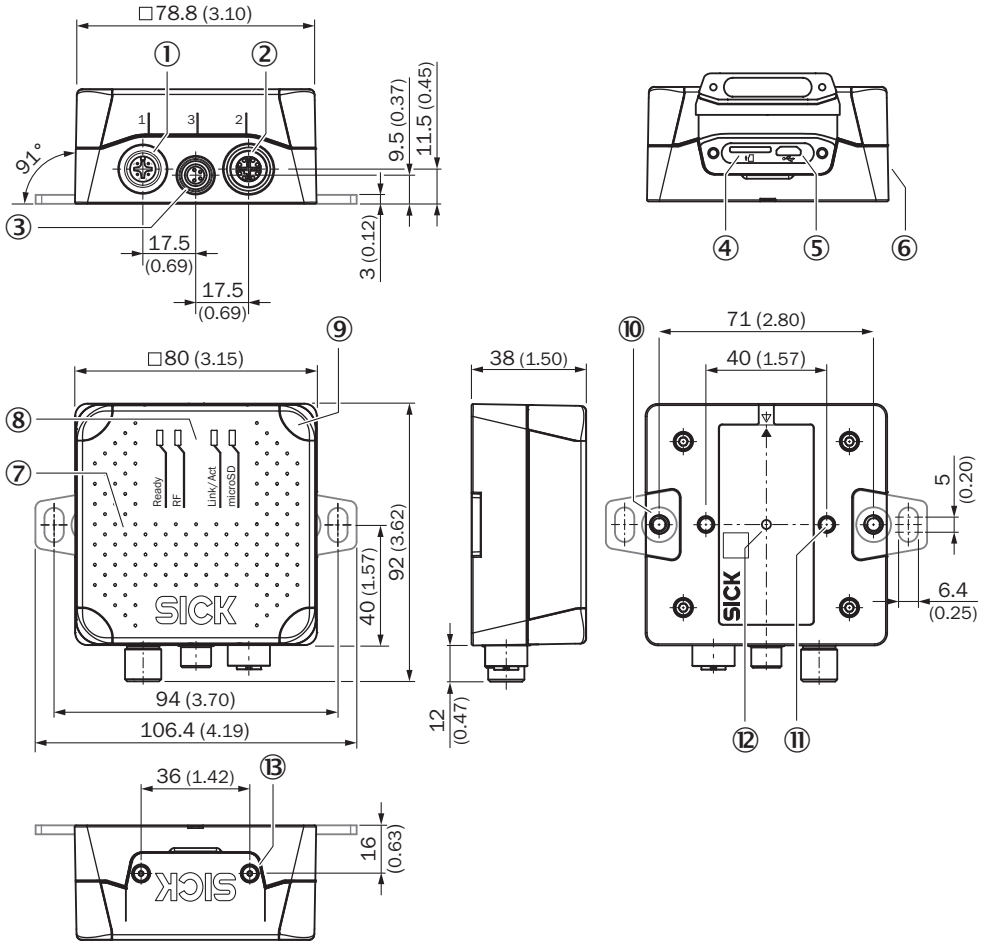

① Port 1: Power (male connector, M12, 4-pin, A-coded)
② Port 2: PoE (female connector, M12, 8-pin, X-coded)
③ Port 3: Trigger (female connector, M8, 4-pin, A-coded)
④ Slot for microSD memory card
⑤ “USB” connection (female connector, 5-pin, type Micro-B) interface for temporary use (service)
⑥ Side type label
⑦ Cover with integrated antenna
⑧ 4 x multi-colored LED (status)
⑨ 4 x RGB LED (process feedback)
⑩ 2 x M5 blind tapped holes, 6 mm deep for attaching the mounting straps
⑪ 2 x M5 blind tapped holes, 7 mm deep for mounting the device
⑫ Type label with integrated pressure compensation membrane
⑬ 2 x screw (M2,5 socket screw), captive, for side cover

Radiation pattern

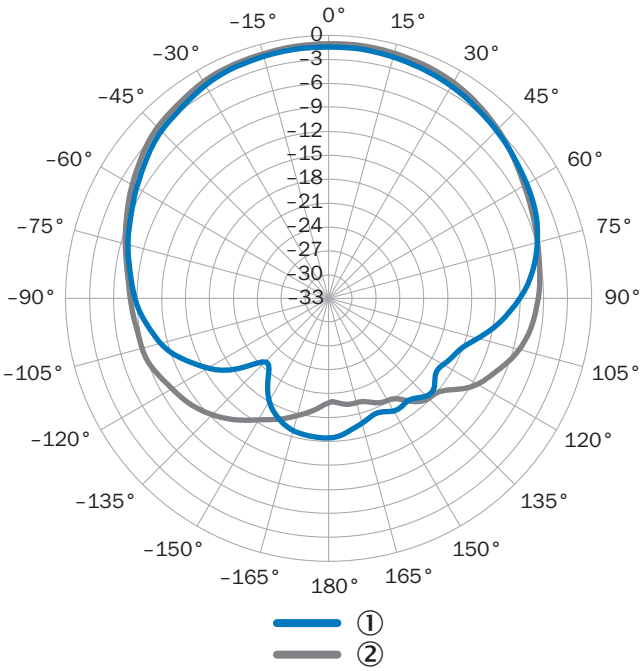

Measured antenna gain in dBic at 866.5 MHz, LHCP (left-hand circularly polarized)
① Horizontal plane (azimuth)
② Vertical plane (elevation)

Connection diagram

PROFINET IO/RT

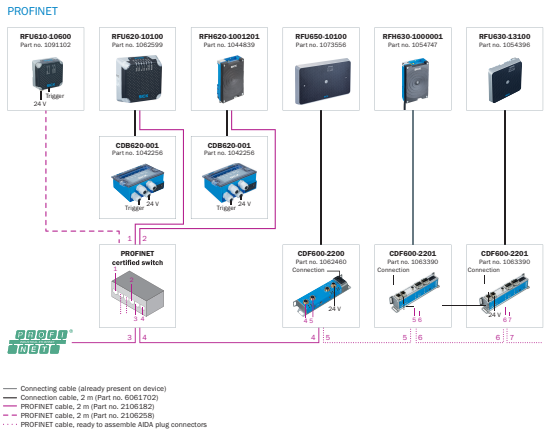

System construction

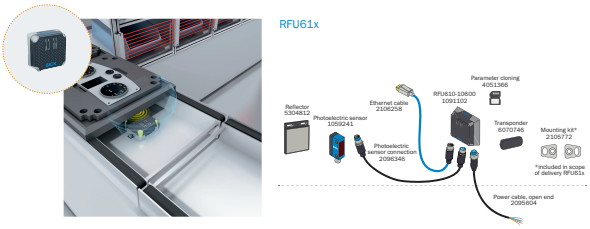

Monitoring of an assembly line, PCB production and pallet identification

Overview

SICK AppSpace

Recommended accessories

Other models and accessories ➜ www.sick.com/RFU61x

	Brief description	Type	Part no.
Reflectors			
	Rectangular, screw connection, 51 mm x 61 mm, PMMA/ABS, Screw-on, 2 hole mounting	P250	5304812
Others			
	• **Carrier frequency:** 865 MHz ... 928 MHz • **Memory capacity (UII / user memory):** 496/128 Bit • **Dimensions (L x W x H):** 15 mm x 97 mm x 0.2 mm	UHF Transponder, paper label, global	6070051
	• **Connection type head A:** Female connector, M12, 4-pin, straight, A-coded • **Connection type head B:** Flying leads • **Signal type:** Sensor/actuator cable • **Cable:** 2 m, 4-wire, PUR, halogen-free • **Description:** Sensor/actuator cable, unshielded • **Application:** Zones with oils and lubricants, Drag chain operation, Robot	YF2A14-020UB3XLEAX	2095607
	• **Connection type head A:** Male connector, M12, 8-pin, straight, X-coded • **Connection type head B:** Male connector, RJ45, 8-pin, straight • **Signal type:** Ethernet, Gigabit Ethernet • **Cable:** 2 m, 8-wire, PUR, halogen-free • **Description:** Ethernet, Gigabit Ethernet, shielded • **Application:** Zones with oils and lubricants	YM2X18-020EG1MRJA8	2106258
	• **Carrier frequency:** 865 MHz ... 928 MHz • **Memory capacity (UII / user memory):** 128/512 Bit • **Dimensions (L x W x H):** 18 mm x 122 mm x 2 mm	UHF Transponder, rectangular, global	6068184
	• **Carrier frequency:** 865 MHz ... 928 MHz • **Memory capacity (UII / user memory):** 496/128 Bit • **Dimensions (L x W x H):** 18 mm x 122 mm x 2 mm	UHF Transponder, Rectangular, global	6088050
Photoelectric sensors			
	GL6-P4211	GL6-P4211	1059241

Recommended services

Additional services ➜ www.sick.com/RFU61x

	Type	Part no.
Commissioning		
• **Product area:** RFID • **Range of services:** Inspection of connection, alignment, optimization of parameters of the RFU/RFH as well as tests, Setup of previously defined functions of reading configuration, data processing and network, interfaces and inputs and outputs • **Duration:** Additional work will be invoiced separately	Commissioning RFU/RFH	1610018
Maintenance		
• **Product area:** RFID • **Range of services:** Inspection, analysis and restoring of defined functions, Checking and adjustment of reading configuration, data processing, network, interfaces and inputs and outputs as well as operating data • **Duration:** Additional work will be invoiced separately	Maintenance RFU/RFH	1611424

	Type	Part no.
Extended warranty		
• **Product area:** Machine vision, LiDAR sensors, safety camera sensors, Safety laser scanners, Safety radar sensors, Radar sensors, Fixed mount barcode scanners, Image-based code readers, RFID, Mobile handheld scanners • **Range of services:** The services correspond to the scope of the statutory manufacturer warranty (SICK general terms of delivery). • **Duration:** Five-year warranty from delivery date.	Extended warranty for a total of five years from delivery date	1680671

SICK AT A GLANCE

SICK is one of the leading manufacturers of intelligent sensors and sensor solutions for industrial applications. A unique range of products and services creates the perfect basis for controlling processes securely and efficiently, protecting individuals from accidents and preventing damage to the environment.

We have extensive experience in a wide range of industries and understand their processes and requirements. With intelligent sensors, we can deliver exactly what our customers need. In application centers in Europe, Asia and North America, system solutions are tested and optimized in accordance with customer specifications. All this makes us a reliable supplier and development partner.

Comprehensive services complete our offering: SICK LifeTime Services provide support throughout the machine life cycle and ensure safety and productivity.

For us, that is "Sensor Intelligence."

WORLDWIDE PRESENCE:

Contacts and other locations –www.sick.com

SICK
Sensor Intelligence.