Product data sheet

A3M60B-BHPB013x13

A3M60

ABSOLUTE ENCODERS

SICK
Sensor Intelligence.

Illustration may differ

Ordering information

Type	Part no.
A3M60B-BHPB013x13	1051017

Other models and accessories ➜ www.sick.com/A3M60

Detailed technical data

Performance

Number of steps per revolution (max. resolution)	8,192 (13 bit)
Number of revolutions	8,192 (13 bit)
Max. resolution (number of steps per revolution x number of revolutions)	13 bit x 13 bit (8,192 x 8,192)
Error limits G	0.5° (at room temperature) [1]
Repeatability standard deviation σ_r	0.25° (at room temperature) [2]

[1] In accordance with DIN ISO 1319-1, position of the upper and lower error limit depends on the installation situation, specified value refers to a symmetrical position, i.e. deviation in upper and lower direction is the same.
[2] In accordance with DIN ISO 55350-13; 68.3% of the measured values are inside the specified area.

Interfaces

Communication interface	PROFIBUS DP
Communication Interface detail	DPV0
Data transmission rate (baud rate)	≤ 12 MBaud
Initialization time	Approx. 1 s
Parameterising data	Number of steps per revolution Number of revolutions PRESET Counting direction
Bus termination	DIP switch

Electrical data

Connection type	Male connector, Female connector, 2x, 1x, M12, M12, 5-pin, 5-pin, axial, axial
Supply voltage	10 ... 32 V
Power consumption	≤ 1.5 W
Reverse polarity protection	✓
MTTFd: mean time to dangerous failure	60 years (EN ISO 13849-1) [1]

[1] This product is a standard product and does not constitute a safety component as defined in the Machinery Directive. Calculation based on nominal load of components, average ambient temperature 40°C, frequency of use 8760 h/a. All electronic failures are considered hazardous. For more information, see document no. 8015532.

Mechanical data

Mechanical design	Blind hollow shaft
Shaft diameter	15 mm
Weight	0.28 kg
Shaft material	Stainless steel
Flange material	Aluminum
Housing material	Aluminum
Start up torque	1 Ncm (+20 °C)
Operating torque	0.8 Ncm (+20 °C)
Permissible movement static	± 0.3 mm (radial) ± 0.5 mm (axial)
Permissible movement dynamic	± 0.1 mm (radial) ± 0.2 mm (axial)
Operating speed	≤ 9,000 min^{-1} [1]
Bearing lifetime	3.0 x 10^9 revolutions
Angular acceleration	≤ 500,000 rad/s^2

[1] Self warming 45 K at maximum operating speed.

Ambient data

EMC	According to EN 61000-6-2 and EN 61000-6-3
Enclosure rating	IP65, shaft side (IEC 60529) IP67, housing side (IEC 60529) [1]
Permissible relative humidity	95 % (Condensation not permitted)
Operating temperature range	–10 °C ... +70 °C
Storage temperature range	–40 °C ... +100 °C
Resistance to shocks	80 g, 6 ms (EN 60068-2-27)
Resistance to vibration	30 g, 10 Hz ... 2,000 Hz (EN 60068-2-6)

[1] With mating connector fitted.

Classifications

ECLASS 5.0	27270502
ECLASS 5.1.4	27270502
ECLASS 6.0	27270590
ECLASS 6.2	27270590
ECLASS 7.0	27270502
ECLASS 8.0	27270502
ECLASS 8.1	27270502
ECLASS 9.0	27270502
ECLASS 10.0	27270502
ECLASS 11.0	27270502
ECLASS 12.0	27270502
ETIM 5.0	EC001486
ETIM 6.0	EC001486
ETIM 7.0	EC001486

ETIM 8.0	EC001486
UNSPSC 16.0901	41112113

Dimensional drawing (Dimensions in mm (inch))

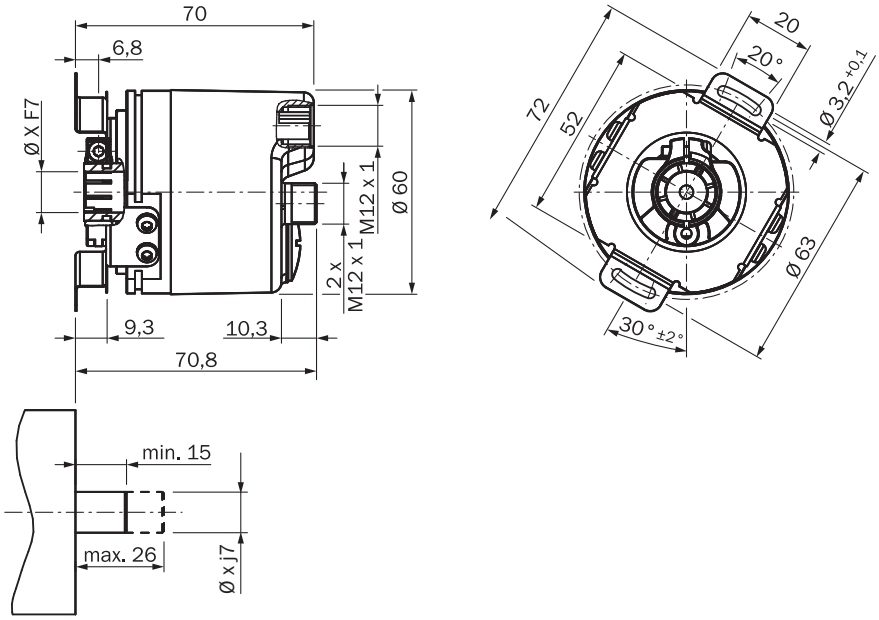

PIN assignment

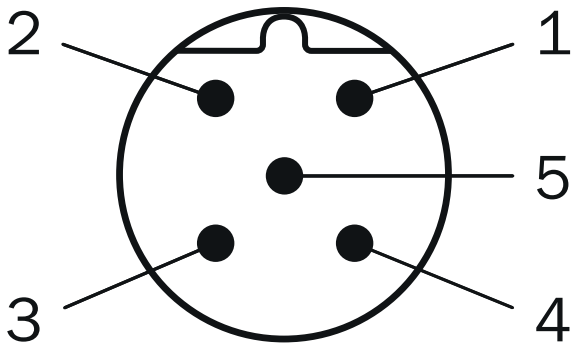

PIN	PROFIBUS IN	PROFIBUS OUT	Supply voltage
1	Not assigned	+5 V 2P5 1)	Operating voltage
2	PROFIBUS Data A	PROFIBUS Data A	Not assigned
3	Not assigned	0 V (2M) 1)	Ground (0 V)
4	PROFIBUS	PROFIBUS	Not assigned

PIN	PROFIBUS IN	PROFIBUS OUT	Supply voltage
	Data B	Data B	
5	Screen	Screen	Not assigned
[1] External connection to the bus			

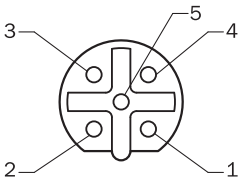

PIN	PROFIBUS IN	PROFIBUS OUT	Supply voltage
1	Not assigned	+5 V 2P5 [1]	Operating voltage
2	PROFIBUS Data A	PROFIBUS Data A	Not assigned
3	Not assigned	0 V (2M) [1]	Ground (0 V)
4	PROFIBUS Data B	PROFIBUS Data B	Not assigned
5	Screen	Screen	Not assigned
[1] External connection to the bus			

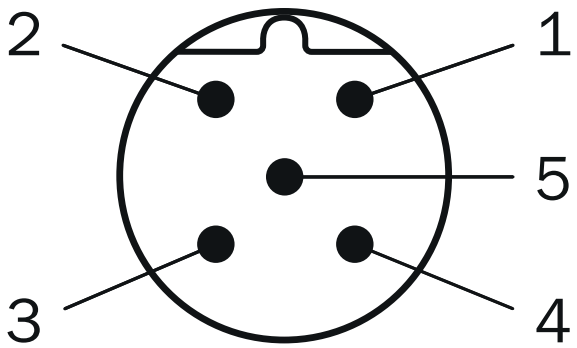

PIN	PROFIBUS IN	PROFIBUS OUT	Supply voltage
1	Not assigned	+5 V 2P5 [1]	Operating voltage
2	PROFIBUS Data A	PROFIBUS Data A	Not assigned
3	Not assigned	0 V (2M) [1]	Ground (0 V)
4	PROFIBUS Data B	PROFIBUS Data B	Not assigned

PIN	PROFIBUS IN	PROFIBUS OUT	Supply voltage
5 1) External connection to the bus	Screen	Screen	Not assigned

Recommended accessories

Other models and accessories ➜ www.sick.com/A3M60

	Brief description	Type	Part no.
Others			
	• **Connection type head A:** Female connector, M12, 5-pin, straight, B-coded • **Connection type head B:** Male connector, M12, 5-pin, straight, B-coded • **Signal type:** PROFIBUS DP • **Cable:** 10 m, 2-wire, PUR, halogen-free • **Description:** PROFIBUS DP, twisted pair, shielded • **Note:** Wire shield Al-Pt film, overall shield C-screen tin-plated • **Application:** Zones with oils and lubricants, Drag chain operation	DSL-1205-G10MQ	6032640
	• **Connection type head A:** Flying leads • **Connection type head B:** Flying leads • **Signal type:** PROFIBUS DP • **Cable:** 2-wire, PUR • **Description:** PROFIBUS DP, shielded	LTG-2102-MW	6021355
	• **Connection type head A:** Male connector, M12, 4-pin, straight, B-coded • **Signal type:** PROFIBUS DP • **Description:** PROFIBUS DP, terminal resistor	STE-END-Q	6021156
	• **Connection type head A:** Male connector, M12, 5-pin, straight, B-coded • **Signal type:** PROFIBUS DP • **Description:** PROFIBUS DP, shielded, Head A: male connector, M12, 5-pin, straight, B coded, shielded, for cable diameter 4 mm ... 9 mm Head B: - • **Connection systems:** Screw-type terminals • **Permitted cross-section:** ≤ 0.75 mm²	STE-1205-GQ	6021354
	• **Connection type head A:** Female connector, M12, 5-pin, straight, B-coded • **Signal type:** PROFIBUS DP • **Description:** PROFIBUS DP, shielded, Head A: M12 female connector, 5-pin, straight, B-coded, PROFIBUS DP, shielded, for cable diameter 4 mm ... 9 mm Head B: - • **Connection systems:** Screw-type terminals • **Permitted cross-section:** ≤ 0.75 mm²	DOS-1205-GQ	6021353
	• **Connection type head A:** Female connector, M12, 5-pin, angled, B-coded • **Signal type:** PROFIBUS DP • **Description:** PROFIBUS DP, shielded, Head A: female connector, M12, 5-pin, angled, B-coded, shielded, for cable diameter 4 mm ... 8 mm Head B: - • **Connection systems:** Spring-cage connection • **Permitted cross-section:** 0.14 mm² ... 0.5 mm²	DOS-1205-WQ	6041429
	• **Connection type head A:** Male connector, M12, 5-pin, angled, B-coded • **Signal type:** PROFIBUS DP • **Description:** PROFIBUS DP, shielded, Head A: male connector, M12, 5-pin, angled, B coded, shielded, for cable diameter 4 mm ... 8 mm Head B: - • **Connection systems:** Spring-cage connection • **Permitted cross-section:** 0.14 mm² ... 0.5 mm²	STE-1205-WQ	6041428

	Brief description	Type	Part no.
	• **Connection type head A:** Female connector, M12, 5-pin, angled, A-coded • **Connection type head B:** Flying leads • **Signal type:** Sensor/actuator cable • **Cable:** 5 m, 2-wire, PUR, halogen-free • **Description:** Sensor/actuator cable, unshielded, Head A: female connector, M12, 5-pin, angled Head B: cable Cable: for power supply, PUR, halogen-free, shielded, 3 x 0.34 mm², Ø 4.2 mm • **Note:** Voltage supply • **Application:** Zones with oils and lubricants	DOL-1202-W05MC	6042067
	• **Connection type head A:** Female connector, M12, 5-pin, angled, A-coded • **Connection type head B:** Flying leads • **Signal type:** Sensor/actuator cable • **Cable:** 10 m, 2-wire, PUR, halogen-free • **Description:** Sensor/actuator cable, unshielded • **Note:** Voltage supply • **Application:** Zones with oils and lubricants	DOL-1202-W10MC	6042068
	DOS-3XM12-W	DOS-3XM12-W	2058177
	• **Connection type head A:** Female connector, M12, 5-pin, straight, A-coded • **Connection type head B:** Flying leads • **Signal type:** Sensor/actuator cable • **Cable:** 5 m, 5-wire, PUR, halogen-free • **Description:** Sensor/actuator cable, shielded • **Application:** Zones with oils and lubricants, Drag chain operation, Robot	YF2A25-050UB6XLEAX	2095733
	• **Connection type head A:** Female connector, M12, 5-pin, straight, A-coded • **Connection type head B:** Flying leads • **Signal type:** Sensor/actuator cable • **Cable:** 10 m, 5-wire, PUR, halogen-free • **Description:** Sensor/actuator cable, shielded • **Application:** Zones with oils and lubricants, Drag chain operation, Robot	YF2A25-100UB6XLEAX	2095734
	• **Connection type head A:** Female connector, M12, 5-pin, straight, A-coded • **Connection type head B:** Flying leads • **Signal type:** Sensor/actuator cable • **Cable:** 20 m, 5-wire, PUR, halogen-free • **Description:** Sensor/actuator cable, shielded • **Application:** Zones with oils and lubricants, Drag chain operation, Robot	YF2A25-200UB6XLEAX	2095738
	• **Connection type head A:** Female connector, M12, 5-pin, angled, A-coded • **Description:** Unshielded • **Connection systems:** Screw-type terminals • **Permitted cross-section:** ≤ 0.75 mm²	DOS-1205-W	6009720
	• **Connection type head A:** Female connector, M12, 5-pin, straight, A-coded • **Description:** Unshielded, Head A: female connector, M12, 5-pin, straight, unshielded, for cable diameter 4 mm ... 6 mm Head B: - • **Connection systems:** Screw-type terminals • **Permitted cross-section:** ≤ 0.75 mm²	DOS-1205-G	6009719
	• **Connection type head A:** Male connector, M12, 2-pin, straight, B-coded • **Connection type head B:** Flying leads • **Signal type:** Fieldbus, PROFIBUS DP • **Cable:** 15 m, 2-wire, PUR, halogen-free • **Description:** Fieldbus, PROFIBUS DP, shielded • **Application:** Drag chain operation, Zones with oils and lubricants	YM2B22-150PB1XLEAX	2106276
	• **Connection type head A:** Male connector, M12, 2-pin, angled, B-coded • **Connection type head B:** Flying leads • **Signal type:** Fieldbus, PROFIBUS DP • **Cable:** 5 m, 2-wire, PUR, halogen-free • **Description:** Fieldbus, PROFIBUS DP, shielded • **Application:** Drag chain operation, Zones with oils and lubricants	YN2B22-050PB1XLEAX	2106277
	YG2B22-050PB1XLEAX	YG2B22-050PB1XLEAX	2106274

	Brief description	Type	Part no.
	• **Connection type head A:** Female connector, M12, 2-pin, angled, B-coded • **Connection type head B:** Flying leads • **Signal type:** Fieldbus, PROFIBUS DP • **Cable:** 10 m, 2-wire, PUR, halogen-free • **Description:** Fieldbus, PROFIBUS DP, shielded • **Application:** Drag chain operation, Zones with oils and lubricants	YG2B22-100PB1XLEAX	2106275
	• **Connection type head A:** Male connector, M12, 2-pin, angled, B-coded • **Connection type head B:** Flying leads • **Signal type:** Fieldbus, PROFIBUS DP • **Cable:** 10 m, 2-wire, PUR, halogen-free • **Description:** Fieldbus, PROFIBUS DP, shielded • **Application:** Drag chain operation, Zones with oils and lubricants	YN2B22-100PB1XLEAX	2106278
	• **Connection type head A:** Male connector, M12, 2-pin, straight, B-coded • **Connection type head B:** Flying leads • **Signal type:** Fieldbus, PROFIBUS DP • **Cable:** 5 m, 2-wire, PUR, halogen-free • **Description:** Fieldbus, PROFIBUS DP, shielded • **Application:** Drag chain operation, Zones with oils and lubricants	YM2B22-050PB1XLEAX	2106270
	• **Connection type head A:** Male connector, M12, 2-pin, straight, B-coded • **Connection type head B:** Flying leads • **Signal type:** Fieldbus, PROFIBUS DP • **Cable:** 10 m, 2-wire, PUR, halogen-free • **Description:** Fieldbus, PROFIBUS DP, shielded • **Application:** Drag chain operation, Zones with oils and lubricants	YM2B22-100PB1XLEAX	2106271
	• **Connection type head A:** Female connector, M12, 2-pin, straight, B-coded • **Connection type head B:** Flying leads • **Signal type:** Fieldbus, PROFIBUS DP • **Cable:** 10 m, 2-wire, PUR, halogen-free • **Description:** Fieldbus, PROFIBUS DP, shielded • **Application:** Drag chain operation, Zones with oils and lubricants	YF2B22-100PB1XLEAX	2106269
	YF2B22-150PB1XLEAX	YF2B22-150PB1XLEAX	2106272
	YF2B22-200PB1XLEAX	YF2B22-200PB1XLEAX	2106273
	• **Connection type head A:** Female connector, M12, 2-pin, straight, B-coded • **Connection type head B:** Flying leads • **Signal type:** Fieldbus, PROFIBUS DP • **Cable:** 5 m, 2-wire, PUR, halogen-free • **Description:** Fieldbus, PROFIBUS DP, shielded • **Application:** Drag chain operation, Zones with oils and lubricants	YF2B22-050PB1XLEAX	2121936

SICK AT A GLANCE

SICK is one of the leading manufacturers of intelligent sensors and sensor solutions for industrial applications. A unique range of products and services creates the perfect basis for controlling processes securely and efficiently, protecting individuals from accidents and preventing damage to the environment.

We have extensive experience in a wide range of industries and understand their processes and requirements. With intelligent sensors, we can deliver exactly what our customers need. In application centers in Europe, Asia and North America, system solutions are tested and optimized in accordance with customer specifications. All this makes us a reliable supplier and development partner.

Comprehensive services complete our offering: SICK LifeTime Services provide support throughout the machine life cycle and ensure safety and productivity.

For us, that is "Sensor Intelligence."

WORLDWIDE PRESENCE:

Contacts and other locations –www.sick.com

SICK
Sensor Intelligence.