Product data sheet

MZT8-03VNS-KP0

MZT8

SENSORS FOR T-SLOT CYLINDERS

SICK
Sensor Intelligence.

Ordering information

Type	Part no.
MZT8-03VNS-KP0	1044932

Other models and accessories ➜ www.sick.com/MZT8

Detailed technical data

Features

Cylinder type	T-slot
Cylinder types with adapter	Profile cylinder Tie rod cylinder Round body cylinder Dovetail groove cylinder SMC rail CDQ2 SMC rail ECDQ2
Housing length	24 mm
Switching output	NPN
Switching frequency	1,000 Hz
Output function	NO
Electrical wiring	DC 3-wire
Enclosure rating	IP68 [1]

[1] According to EN 60529 (IP 67 / IP 68).

Mechanics/electronics

Supply voltage	10 V DC ... 30 V DC
Power consumption	10 mA, without load
Voltage drop	≤ 2.2 V
Continuous current I_a	≤ 200 mA
Protection class	III
Time delay before availability	25 ms
Response sensitivity, typ.	2.6 mT
Overrun distance, typ.	3 mm
Hysteresis, typ.	0.7 mT

[1] Supply voltage U_B and constant ambient temperature Ta.

Reproducibility	≤ 0.1 mT [1)]
Reverse polarity protection	Yes
Short-circuit protection	Yes
Status indicator LED	Yes
Power-up pulse protection	Yes
Ambient operating temperature	–30 °C ... +80 °C
Shock and vibration resistance	30 g, 11 ms / 10 ... 55 Hz, 1 mm
EMC	According to EN 60947-5-2
Connection type	Cable with connector M8, 3-pin, drag chain use, 0.3 m
Connection type Detail	
Conductor cross section	0.14 mm²
Cable diameter	Ø 2.9 mm
Bending radius	With fixed installation > 3 x cable diameter For flexible use > 10 x cable diameter
Torsion force	± 270° / 10 cm
Torsion cycles	> 2,000,000
Drag chain cycles	> 2,000,000
Drag chain parameters	Traversing speed max. 3.3 m/s at 5 m horizontal traversing length Acceleration max. 5 m/s²
Cable outlet	Axial
Material	
Housing	Plastic, PA12
Cable	PUR
UL File No.	NRKH.E181493 & NRKH7.E181493

[1)] Supply voltage U_B and constant ambient temperature Ta.

Safety-related parameters

$MTTF_D$	2,289 years
DC_{avg}	0 %
T_M (mission time)	20 years

Classifications

ECLASS 5.0	27270104
ECLASS 5.1.4	27270104
ECLASS 6.0	27270104
ECLASS 6.2	27270104
ECLASS 7.0	27270104
ECLASS 8.0	27270104
ECLASS 8.1	27270104
ECLASS 9.0	27270104
ECLASS 10.0	27270104
ECLASS 11.0	27270104
ECLASS 12.0	27274301

ETIM 5.0	EC002544
ETIM 6.0	EC002544
ETIM 7.0	EC002544
ETIM 8.0	EC002544
UNSPSC 16.0901	39122230

Installation note

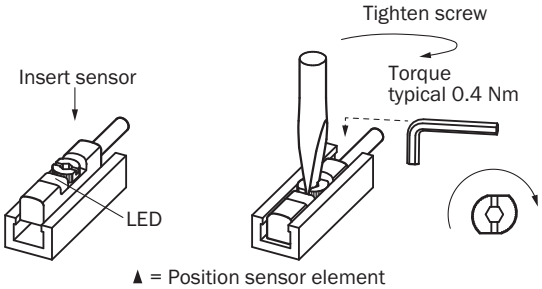

Connection diagram

Cd-002

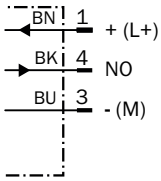

Dimensional drawing (Dimensions in mm (inch))

Cable with connector M8

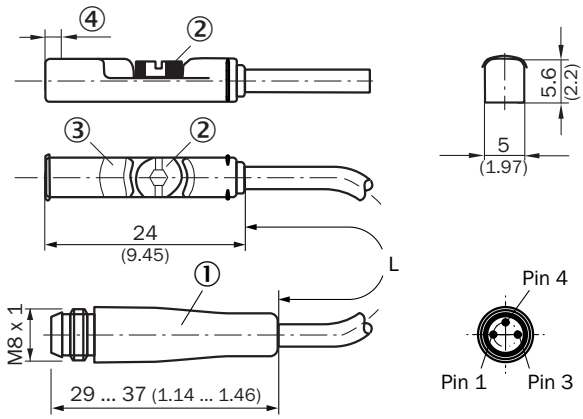

① Connection
② Fixing screw SW 2.0
③ Display LED
④ Sensor element position; short overrun distance (3 mm): 2.25 mm, long overrun distance (9 mm): 1.5 mm

Part no.	Type	L	Number of cores
1121966	MZT8-03VPS-KPDS38	120 mm	3
1044458	MZT8-03VPS-KP0	300 mm	3
1044930	MZT8-03VPO-KP0	300 mm	3
1044932	MZT8-03VNS-KP0	300 mm	3
1048048	MZT8-28VPS-KP0	300 mm	3
1053014	MZT8-19VPS-KP0	300 mm	3
1053415	MZT8-03VPS-KP0S06	300 mm	3
1054250	MZT8-28VPS-KP0S10	300 mm	3
1073268	MZT8-2V6PSTKP0	300 mm	3
1044461	MZT8-03VPS-KPD	750 mm	3

Recommended accessories

Other models and accessories ➜ www.sick.com/MZT8

	Brief description	Type	Part no.
Brackets for cylinder sensors			
	Mounting bracket for cylinder with dovetail slot, Aluminum, without mounting hardware	BEF-KHZ-ST1	2022703
	Mounting bracket for integrated profile cylinder/tie-rod cylinder, zinc diecast, mounting hardware included	BEF-KHZ-PT1	2022702
	1 piece, Mounting bracket on round body cylinder with piston diameter of 12 mm, ambient temperature min 0 °C max 50 °C, plastic, Aluminum	BEF-KHZ-RT-12	2077681
	1 piece, Mounting bracket on round body cylinder with piston diameter of 16 mm, ambient temperature min 0 °C max 50 °C, plastic, Aluminum	BEF-KHZ-RT-16	2077680
	1 piece, Mounting bracket on round body cylinder with piston diameter of 20 mm, ambient temperature min 0 °C max 50 °C, plastic, Aluminum	BEF-KHZ-RT-20	2077679
	1 piece, Mounting bracket on round body cylinder with piston diameter of 25 mm, ambient temperature min 0 °C max 50 °C, plastic, Aluminum	BEF-KHZ-RT-25	2077678
	1 piece, Mounting bracket on round body cylinder with piston diameter of 32 mm, ambient temperature min 0 °C max 50 °C, plastic, Aluminum	BEF-KHZ-RT-32	2077677
	1 piece, Mounting bracket on round body cylinder with piston diameter of 40 mm, ambient temperature min 0 °C max 50 °C, plastic, Aluminum	BEF-KHZ-RT-40	2077676
	1 piece, Mounting bracket on round body cylinder with piston diameter of 50 mm, ambient temperature min 0 °C max 50 °C, plastic, Aluminum	BEF-KHZ-RT-50	2077675
	1 piece, Mounting bracket on round body cylinder with piston diameter of 63 mm, ambient temperature min 0 °C max 50 °C, plastic, Aluminum	BEF-KHZ-RT-63	2077674
	1 piece, Mounting bracket on round body cylinder with piston diameter of 8 mm ... 130 mm, ambient temperature min –30 °C max 80 °C, stainless steel, Zinc cast	BEF-KHZ-RT1-130	2077684
	1 piece, Mounting bracket on round body cylinder with piston diameter of 8 mm ... 25 mm, ambient temperature min –30 °C max 80 °C, stainless steel, Zinc cast	BEF-KHZ-RT1-25	2077682
	1 piece, Mounting bracket on round body cylinder with piston diameter of 8 mm ... 63 mm, ambient temperature min –30 °C max 80 °C, stainless steel, Zinc cast	BEF-KHZ-RT1-63	2077683

	Brief description	Type	Part no.
	Mounting bracket for mounting on SMC rails CDQ2 (T-slot), Aluminum, without mounting hardware	BEF-KHZ-TT2	2046440
	Mounting bracket for mounting on SMC rails ECDQ2 (T-slot), Aluminum, without mounting hardware	BEF-KHZ-TT1	2046439
Device protection (mechanical)			
	Protective adapter, die-cast zinc, mounting hardware included	BEF-SG-MRZT	2077201
Others			
	• **Connection type head A:** Female connector, M8, 3-pin, straight, A-coded • **Description:** Unshielded • **Connection systems:** Screw-type terminals • **Permitted cross-section:** 0.14 mm² ... 0.5 mm²	DOS-0803-G	7902077
	• **Connection type head A:** Female connector, M8, 3-pin, angled, A-coded • **Description:** Unshielded • **Connection systems:** Solder connection • **Permitted cross-section:** ≤ 0.25 mm²	DOS-0803-W	7902078
	• **Connection type head A:** Male connector, M8, 3-pin, straight, A-coded • **Description:** Unshielded • **Connection systems:** Screw-type terminals • **Permitted cross-section:** 0.14 mm² ... 0.5 mm²	STE-0803-G	6037322
	• **Connection type head A:** Female connector, M8, 3-pin, straight, A-coded • **Connection type head B:** Flying leads • **Signal type:** Sensor/actuator cable • **Cable:** 2 m, 3-wire, PVC • **Description:** Sensor/actuator cable, unshielded • **Application:** Zones with chemicals	YF8U13-020VA1XLEAX	2095860
	• **Connection type head A:** Female connector, M8, 3-pin, straight, A-coded • **Connection type head B:** Flying leads • **Signal type:** Sensor/actuator cable • **Cable:** 5 m, 3-wire, PVC • **Description:** Sensor/actuator cable, unshielded • **Application:** Zones with chemicals	YF8U13-050VA1XLEAX	2095884
	• **Connection type head A:** Female connector, M8, 3-pin, angled, A-coded • **Connection type head B:** Flying leads • **Signal type:** Sensor/actuator cable • **Cable:** 2 m, 3-wire, PVC • **Description:** Sensor/actuator cable, unshielded • **Application:** Zones with chemicals	YG8U13-020VA1XLEAX	2096165
	• **Connection type head A:** Female connector, M8, 3-pin, angled, A-coded • **Connection type head B:** Flying leads • **Signal type:** Sensor/actuator cable • **Cable:** 5 m, 3-wire, PVC • **Description:** Sensor/actuator cable, unshielded • **Application:** Zones with chemicals	YG8U13-050VA1XLEAX	2096166
	• **Connection type head A:** Female connector, M8, 3-pin, straight, A-coded • **Connection type head B:** Flying leads • **Signal type:** Sensor/actuator cable • **Cable:** 2 m, 3-wire, PUR, halogen-free • **Description:** Sensor/actuator cable, unshielded • **Application:** Zones with oils and lubricants, Drag chain operation, Robot	YF8U13-020UA1XLEAX	2094782

	Brief description	Type	Part no.
	• **Connection type head A:** Female connector, M8, 3-pin, straight, A-coded • **Connection type head B:** Flying leads • **Signal type:** Sensor/actuator cable • **Cable:** 5 m, 3-wire, PUR, halogen-free • **Description:** Sensor/actuator cable, unshielded • **Application:** Zones with oils and lubricants, Drag chain operation, Robot	YF8U13-050UA1XLEAX	2094788
	• **Connection type head A:** Female connector, M8, 3-pin, angled, A-coded • **Connection type head B:** Flying leads • **Signal type:** Sensor/actuator cable • **Cable:** 2 m, 3-wire, PUR, halogen-free • **Description:** Sensor/actuator cable, unshielded • **Application:** Zones with oils and lubricants, Drag chain operation, Robot	YG8U13-020UA1XLEAX	2094794
	• **Connection type head A:** Female connector, M8, 3-pin, angled, A-coded • **Connection type head B:** Flying leads • **Signal type:** Sensor/actuator cable • **Cable:** 5 m, 3-wire, PUR, halogen-free • **Description:** Sensor/actuator cable, unshielded • **Application:** Zones with oils and lubricants, Drag chain operation, Robot	YG8U13-050UA1XLEAX	2095586

SICK AT A GLANCE

SICK is one of the leading manufacturers of intelligent sensors and sensor solutions for industrial applications. A unique range of products and services creates the perfect basis for controlling processes securely and efficiently, protecting individuals from accidents and preventing damage to the environment.

We have extensive experience in a wide range of industries and understand their processes and requirements. With intelligent sensors, we can deliver exactly what our customers need. In application centers in Europe, Asia and North America, system solutions are tested and optimized in accordance with customer specifications. All this makes us a reliable supplier and development partner.

Comprehensive services complete our offering: SICK LifeTime Services provide support throughout the machine life cycle and ensure safety and productivity.

For us, that is "Sensor Intelligence."

WORLDWIDE PRESENCE:

Contacts and other locations –www.sick.com

SICK
Sensor Intelligence.