Product data sheet

GTB10-R3812

G10

SMALL PHOTOELECTRIC SENSORS

SICK
Sensor Intelligence.

Illustration may differ

Ordering information

Type	Part no.
GTB10-R3812	1065862

Included in delivery: BEF-G10UC01 (1)

Other models and accessories → www.sick.com/G10

Detailed technical data

Features

Functional principle	Photoelectric proximity sensor
Functional principle detail	Background suppression
Dimensions (W x H x D)	20 mm x 50 mm x 51.5 mm
Housing design (light emission)	Rectangular
Sensing range max.	20 mm ... 950 mm [1]
Type of light	Visible red light
Light source	PinPoint LED [2]
Light spot size (distance)	Ø 8 mm (700 mm)
Wave length	625 nm
Adjustment	Potentiometer, 5 turns

[1] Object with 90% remission (based on standard white, DIN 5033).
[2] Average service life: 100,000 h at T_U = +25 °C.

Mechanics/electronics

Supply voltage U_B	24 V AC/DC ... 240 V AC/DC [1]

[1] +- 10 %.
[2] May not fall below or exceed U_V tolerances.
[3] Provide suitable spark suppression for inductive or capacitive loads.
[4] With light/dark ratio 1:1.
[5] Do not bend below 0 °C.
[6] C = interference suppression.
[7] Reference voltage: 250 V AC.
[8] In the case of a DC supply (ref. to EN 61000-6-3) the length of cable between the supply source and the sensor must be < 30 m.
[9] UL: 0 °C ... +50 °C.
[10] Complies with the UL325 standard when used with sturdy protection hood (e.g. BEF-G10WSG, 2071960).

Ripple	< 5 V_{pp} [2]
Power consumption	≤ 2.5 VA
Switching output	Relay, SPDT, electrically isolated [3]
Switching load max. (current/voltage)	0.11 A (250 V DC) 3 A (30 V DC) 3 A (250 V AC)
Response time	≤ 10 ms
Switching frequency	20 Hz [4]
Connection type	Cable, 5-wire, 2 m [5]
Cable material	Plastic, PVC
Conductor cross section	0.25 mm²
Circuit protection	C [6]
Protection class	II [7]
Weight	115 g
Interference emission	EN 61000-6-3 (2011-09) [8]
Housing material	Plastic, ABS/PMMA
Enclosure rating	IP67
Relay switching cycles min.	100.000 cycles (3 A)
Items supplied	Mounting bracket BEF-G10UC01
Electromagnetic compatibility (EMC)	EN 60947-5-2 EN 61000-6-3 (2011-09)
Ambient operating temperature	–30 °C ... +60 °C [9]
Ambient temperature, storage	–40 °C ... +70 °C
UL File No.	NRKH.E348498 & NRKH7.E348498
More standards	UL325 [10]

[1] +- 10 %.
[2] May not fall below or exceed U_V tolerances.
[3] Provide suitable spark suppression for inductive or capacitive loads.
[4] With light/dark ratio 1:1.
[5] Do not bend below 0 °C.
[6] C = interference suppression.
[7] Reference voltage: 250 V AC.
[8] In the case of a DC supply (ref. to EN 61000-6-3) the length of cable between the supply source and the sensor must be < 30 m.
[9] UL: 0 °C ... +50 °C.
[10] Complies with the UL325 standard when used with sturdy protection hood (e.g. BEF-G10WSG, 2071960).

Classifications

ECLASS 5.0	27270904
ECLASS 5.1.4	27270904
ECLASS 6.0	27270904
ECLASS 6.2	27270904
ECLASS 7.0	27270904
ECLASS 8.0	27270904
ECLASS 8.1	27270904
ECLASS 9.0	27270904

ECLASS 10.0	27270904
ECLASS 11.0	27270904
ECLASS 12.0	27270903
ETIM 5.0	EC002719
ETIM 6.0	EC002719
ETIM 7.0	EC002719
ETIM 8.0	EC002719
UNSPSC 16.0901	39121528

Adjustments

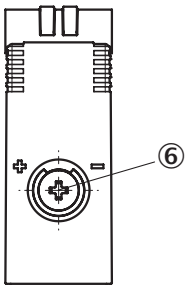

⑥ Adjustment of sensing range

Connection diagram

Cd-163

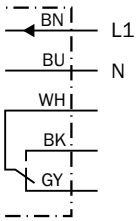

Characteristic curve

GTB10, redlight

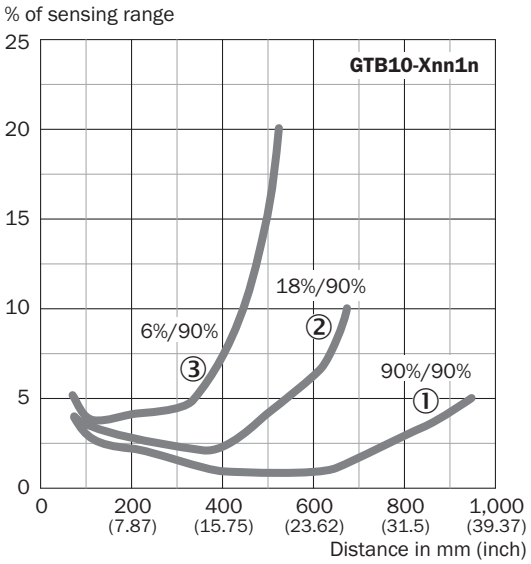

① Sensing range on white, 90% remission factor
② Sensing range on gray, 18% remission factor
③ Sensing range on black, 6% remission factor

Light spot size

Light spot size

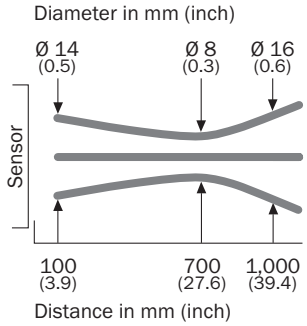

Sensing range diagram

GTB10, redlight

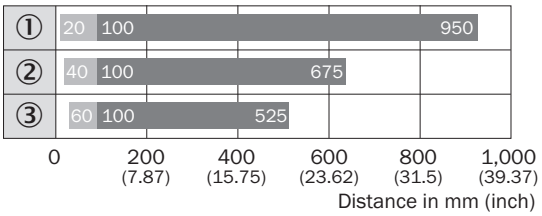

Sensing range Sensing range max.

① Sensing range on white, 90% remission factor
② Sensing range on gray, 18% remission factor
③ Sensing range on black, 6% remission factor

Dimensional drawing (Dimensions in mm (inch))

GTB10, AC/DC, cable

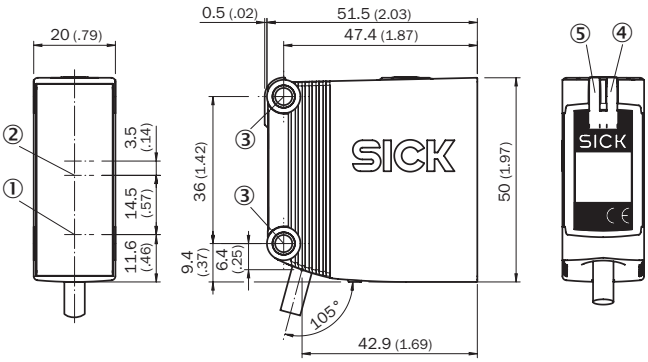

① Center of optical axis, sender
② Center of optical axis, receiver
③ Mounting hole, Ø 4.2 mm
④ LED indicator yellow: Status of received light beam
⑤ LED indicator green: power on

Recommended accessories

Other models and accessories ➜ www.sick.com/G10

	Brief description	Type	Part no.
Universal bar clamp systems			
	Q-Lock, bar clamp system for G10 and reflector P250, Die-cast zinc, steel, zinc coated	BEF-KHSQ12R01	2071260

	Brief description	Type	Part no.
Others			
	• **Connection type head A:** Male connector, M12, 5-pin, straight, A-coded • **Description:** Unshielded, Head A: male connector, M12, 5-pin, straight, unshielded, for cable diameter 4 mm ... 6 mm Head B: - • **Connection systems:** Screw-type terminals • **Permitted cross-section:** ≤ 0.75 mm² • **Note:** For field bus technology	STE-1205-G	6022083

SICK AT A GLANCE

SICK is one of the leading manufacturers of intelligent sensors and sensor solutions for industrial applications. A unique range of products and services creates the perfect basis for controlling processes securely and efficiently, protecting individuals from accidents and preventing damage to the environment.

We have extensive experience in a wide range of industries and understand their processes and requirements. With intelligent sensors, we can deliver exactly what our customers need. In application centers in Europe, Asia and North America, system solutions are tested and optimized in accordance with customer specifications. All this makes us a reliable supplier and development partner.

Comprehensive services complete our offering: SICK LifeTime Services provide support throughout the machine life cycle and ensure safety and productivity.

For us, that is "Sensor Intelligence."

WORLDWIDE PRESENCE:

Contacts and other locations –www.sick.com

SICK
Sensor Intelligence.