Product data sheet

ACM60B-S1LE13x06

ACM60

ABSOLUTE ENCODERS

SICK
Sensor Intelligence.

Illustration may differ

Ordering information

Type	Part no.
ACM60B-S1LE13x06	6045313

Other models and accessories → www.sick.com/ACM60

Detailed technical data

Performance

Number of steps per revolution (max. resolution)	13,107
Number of revolutions	64 (6 bit)
Max. resolution (number of steps per revolution x number of revolutions)	6 bit (13,107 x 64)
Resolution per measuring step	0.8 mV ... 5.5 mV [1]
Resolution	0.35° ... 1.76° [1]
Measurement range	0° ... 23,040°, programmable
Minimum measuring range	≥ 640°
Accuracy	± 0.1 % based on the programmed angle [1]

[1] See measuring step diagram/calculation formula for details.

Interfaces

Communication interface	Analog
Communication Interface detail	Voltage / 0...10 V
Code sequence parameter adjustable	CW (clockwise) [1]
Load resistance	≥ 10 kΩ

[1] Default clockwise - CCW possible via Keyboard programming.

Electrical data

Connection type	Male connector, M12, 5-pin, radial
Supply voltage	18 ... 33 V DC
Current consumption	< 80 mA
Reverse polarity protection	✓
MTTFd: mean time to dangerous failure	600 years (EN ISO 13849-1) [1]

[1] This product is a standard product and does not constitute a safety component as defined in the Machinery Directive. Calculation based on nominal load of components, average ambient temperature 40°C, frequency of use 8760 h/a. All electronic failures are considered hazardous. For more information, see document no. 8015532.

Electrical wiring	4-wire, see figure

[1] This product is a standard product and does not constitute a safety component as defined in the Machinery Directive. Calculation based on nominal load of components, average ambient temperature 40 °C, frequency of use 8760 h/a. All electronic failures are considered hazardous. For more information, see document no. 8015532.

Mechanical data

Mechanical design	Solid shaft, Servo flange
Shaft diameter	6 mm
Shaft length	10 mm
Weight	0.4 kg
Shaft material	Stainless steel
Flange material	Aluminum
Housing material	Aluminum die cast
Start up torque	0.5 Ncm (+20 °C)
Operating torque	0.3 Ncm (+20 °C)
Permissible shaft loading	60 N (radial) 30 N (axial)
Operating speed	≤ 10,000 min^{-1}
Moment of inertia of the rotor	30 gcm^2
Bearing lifetime	2.0 x 10^9 revolutions
Angular acceleration	≤ 500,000 rad/s^2

Ambient data

EMC	According to EN 61000-6-2 and EN 61000-6-4
Enclosure rating	IP65, shaft side (IEC 60529) IP67, housing side (IEC 60529) [1]
Permissible relative humidity	90 % (Condensation not permitted)
Operating temperature range	–30 °C ... +80 °C
Storage temperature range	–40 °C ... +100 °C, without package
Resistance to shocks	50 g, 6 ms (EN 60068-2-27)
Resistance to vibration	4 g, 5 Hz ... 100 Hz (EN 60068-2-6)

[1] With mating connector fitted.

Classifications

ECLASS 5.0	27270502
ECLASS 5.1.4	27270502
ECLASS 6.0	27270590
ECLASS 6.2	27270590
ECLASS 7.0	27270502
ECLASS 8.0	27270502
ECLASS 8.1	27270502
ECLASS 9.0	27270502
ECLASS 10.0	27270502
ECLASS 11.0	27270502
ECLASS 12.0	27270502

ETIM 5.0	EC001486
ETIM 6.0	EC001486
ETIM 7.0	EC001486
ETIM 8.0	EC001486
UNSPSC 16.0901	41112113

Dimensional drawing (Dimensions in mm (inch))

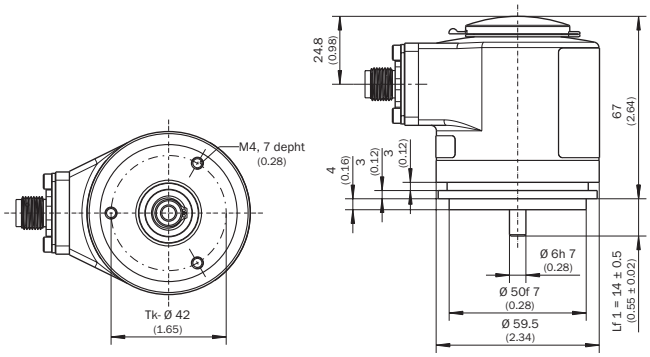

PIN assignment

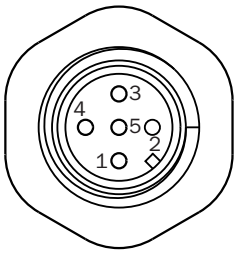

① GND
② + 24 V
③ Output signal GND
④ Output signal 4 ... 20 mA
⑤ N.C.

Resolution diagram

Voltage output

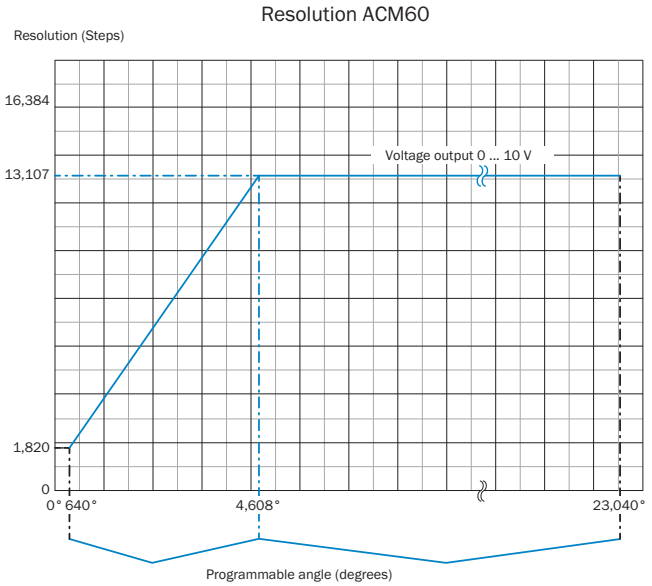

Calculation formula for number of steps in angle range

$$Steps = \frac{Angle \times 1024}{360°}$$

Number of steps in angle range

Steps (0 ... 10 V) = 13107

Electrical wiring

Voltage output

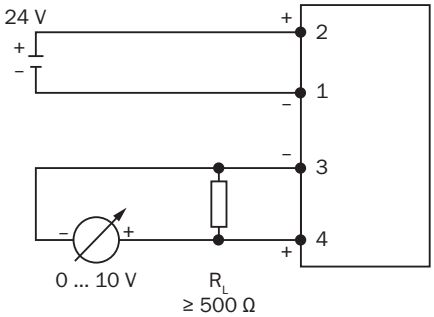

4-wire technology

For an accurate measurement, the internal resistance of the measuring device must be equal to 10 kOhm.

① GND
② + 24 V
③ Output signal GND
④ Output signal 4 ... 20 mA

Recommended accessories

Other models and accessories ➜ www.sick.com/ACM60

	Brief description	Type	Part no.
Shaft adaptation			
	Bellows coupling, shaft diameter 6 mm / 6 mm, maximum shaft offset: radial ± 0.25 mm, axial ± 0.4 mm, angular +/- 4°; max. speed 10,000 rpm, –30 °C to +120 °C, max. torque 120 Ncm; material: stainless steel bellows, aluminum hub	KUP-0606-B	5312981
	Double-loop coupling, shaft diameter 6 mm / 6 mm, maximum shaft offset: radial ± 2.5 mm, axial ± 3 mm, angular ± 10°; max. speed 3,000 rpm, –30 °C to +80 °C, max. torque 1.5 Nm; material: polyurethane, galvanized steel flange	KUP-0606-D	5340152
	Claw coupling, shaft diameter 6 mm / 6 mm, damping element 80 shore blue, maximum shaft offset: radial ± 0.22 mm, axial ± 1 mm angular ± 1.3°, max. speed 19,000 rpm, angle of twist max. 10°, –30 °C to +80 °C, max. torque 800 Ncm, tightening torque of screws: ISO 4029 150 Ncm, material: aluminum flange, damping element: polyurethane	KUP-0606-J	2127057
	Cross-slotted coupling, shaft diameter 6 mm / 6 mm, maximum shaft offset: radial ± 0.3 mm, axial ± 0.2 mm, angle ± 3°; max. speed 10,000 rpm, –10° to +80 °C, max. torque 80 Ncm; material: fiber-glass reinforced polyamide, aluminum hub	KUP-0606-S	2056406
	Bar coupling, shaft diameter 6 mm /8 mm, maximum shaft offset radial ± 0.3 mm, axial ± 0.2 mm, angle ± 3°, max. speed 10,000 rpm, torsion spring rigidity 38 Nm/wheel; material: fiber-glass reinforced polyamide, aluminum hub	KUP-0608-S	5314179
	Bellows coupling, shaft diameter 6 mm / 10 mm, maximum shaft offset: radial ± 0.25 mm, axial ± 0.4 mm, angular +/- 4°; max. speed 10,000 rpm, –30 °C to +120 °C, max. torque 120 Ncm; material: stainless steel bellows, aluminum hub	KUP-0610-B	5312982
	Double loop coupling, shaft diameter 6 mm / 10 mm, max. shaft offset: radially +/- 2,5 mm, axially +/-3 mm, angle +/- 10 degrees;max. speed 3.000 rpm, –30 to +80 degrees Celsius, torsional spring stiffness of 25 Nm/rad	KUP-0610-D	5326697
	Spring washer coupling, shaft diameter 6 mm / 10 mm, Maximum shaft offset: radial +/- 0.3 mm, axial +/- 0.4 mm, angular +/- 2.5°; max. speed 12,000 rpm, –10° to +80 °C, max. torque 60 Ncm; material: aluminum flange, glass fiber-reinforced polyamide membrane and hardened steel coupling pin	KUP-0610-F	5312985
	Claw coupling, shaft diameter 6 mm / 10 mm, damping element 80 shore blue, maximum shaft offset: radial ± 0.22 mm, axial ± 1 mm angular ± 1.3°, max. speed 19,000 rpm, angle of twist max. 10°, –30 °C to +80 °C, max. torque 800 Ncm, tightening torque of screws: ISO 4029 150 Ncm, material: aluminum flange, damping element: polyurethane	KUP-0610-J	2127056
	Bar coupling, shaft diameter 6 mm / 10 mm, max. shaft offset: radial ± 0,3 mm, axial ± 0,3 mm, angular ± 3°; max. speed 10.000 rpm, –10° to +80 °C, max. torque: 80 Ncm, material: fiber-glass reinforced polyamide, aluminum hub	KUP-0610-S	2056407

SICK AT A GLANCE

SICK is one of the leading manufacturers of intelligent sensors and sensor solutions for industrial applications. A unique range of products and services creates the perfect basis for controlling processes securely and efficiently, protecting individuals from accidents and preventing damage to the environment.

We have extensive experience in a wide range of industries and understand their processes and requirements. With intelligent sensors, we can deliver exactly what our customers need. In application centers in Europe, Asia and North America, system solutions are tested and optimized in accordance with customer specifications. All this makes us a reliable supplier and development partner.

Comprehensive services complete our offering: SICK LifeTime Services provide support throughout the machine life cycle and ensure safety and productivity.

For us, that is "Sensor Intelligence."

WORLDWIDE PRESENCE:

Contacts and other locations –www.sick.com

SICK
Sensor Intelligence.